ThinkPad

ThinkPad® X60 Tablet Hardware Maintenance Manual

January 2007

This manual supports:

ThinkPad X60 Tablet
(MT 6363, 6364, 6365, 6366, 6367, and 6368)

Downloaded from www.Manualslib.com manuals search engine

Downloaded from www.Manualslib.com manuals search engine

ThinkPad

ThinkPad® X60 Tablet Hardware Maintenance Manual

Downloaded from www.Manualslib.com manuals search engine

Note

Before using this information and the product it supports, be sure to read the general information under "Notices" on page 124.

Second Edition (January 2007)

© Copyright Lenovo 2006, 2007. All rights reserved.
U.S. GOVERNMENT USERS – RESTRICTED RIGHTS: Our products and/or services are provided with RESTRICTED RIGHTS. Use, duplication or disclosure by the Government is subject to the GSA ADP Schedule contract with Lenovo Group Limited, if any, or the standard terms of this commercial license, or if the agency is unable to accept this Program under these terms, then we provide this Program under the provisions set forth in Commercial Computer Software–Restricted Rights at FAR 52.227-19, when applicable, or under Rights in Data-General, FAR 52.227.14 (Alternate III).

Downloaded from www.Manualslib.com manuals search engine

Contents

About this manual 1

Introduction 3
Important service information 3
Strategy for replacing FRUs 3
Strategy for replacing a hard disk drive 4
Important notice for replacing a system board . . 4
How to use error messages 4
Strategy for replacing FRUs for CTO, CMV, and GAV 4
Product definition 4
FRU identification for CTO, CMV, and GAV products 5
Important information about replacing RoHS compliant FRUs 6
Diskette compatibility matrix 7
Safety notices: multilingual translations 7
Safety information 13
General safety 13
Electrical safety 13
Safety inspection guide 15
Handling devices that are sensitive to electrostatic discharge 16
Grounding requirements 16
Laser compliance statement 17

General descriptions. 19
Read this first 19
What to do first 19
Related service information 21
Service Web site 21
Restoring the factory contents by using Product Recovery discs 21
Passwords 22
Power management 24
Checkout guide 27
Testing the computer 27
Detecting system information with PC-Doctor . . 29
Power system checkout 30

ThinkPad X60 Tablet 33
Product overview 34
Specifications 34
Status indicators 36
FRU tests 38
Fn key combinations 40
Symptom-to-FRU index 42
Numeric error codes 42
Error messages 46
Beep symptoms 47
No-beep symptoms 47
LCD-related symptoms 48
Intermittent problems 49
Undetermined problems 49
FRU replacement notices 50
Screw notices 50
Retaining serial numbers 50
Removing and replacing a FRU. 53
1010 Battery pack 54
1020 Hard disk drive slot cover, hard disk drive rubber rails, and hard disk drive 55
1030 DIMM slot cover and DIMM 57
1040 Hinge caps 59
1050 Keyboard 61
1060 Backup battery 64
1070 LCD extend board 65
1080 Keyboard bezel 66
1090 Modem daughter card (MDC-1.5) 67
1100 PCI Express Mini Card for wireless LAN . . 69
1110 PCI Express Mini Card for wireless WAN . 70
1120 ***Bluetooth*** daughter card (BDC-2) 71
1130 DC-in connector and modem cable 72
1140 Speaker assembly 73
1150 LCD assembly 74
1160 Pen switch assembly, ***Bluetooth*** cable, and base cover 77
1170 HDD connector sub card 80
1180 Fan assembly 81
1190 System board, PC Card/ExpressCard slots assembly 82
2010 LCD front bezel 85
2020 Center latch 86
2030 Fingerprint reader 87
2040 Inverter card 88
2050 Micro processor board 89
2060 Hinge and microphone cable 90
2070 Micro processor board/inverter card FFC (flexible flat cable), LCD panel with digitizer, and LCD cable 92
2080 Wireless antenna cables and LCD rear cover 94
Locations 96
Front view. 96
Rear view 97
Rear view (tablet mode) 97
Bottom view 98
Rear view (ThinkPad X6 Tablet UltraBase) . . . 99
Bottom view (ThinkPad X6 Tablet UltraBase) . . 99
Parts list 100
Overall 100
LCD FRUs 110
Keyboard 117
Recovery discs 118
Miscellaneous parts 120
AC adapters 121
Optional FRUs 121
Common parts list. 122
Notices 124
Trademarks 125

© Copyright Lenovo 2006, 2007

Downloaded from www.Manualslib.com manuals search engine

Downloaded from www.Manualslib.com manuals search engine

About this manual

This manual contains service and reference information for ThinkPad® X60 Tablet (MT 6363, 6364, 6365, 6366, 6367, and 6368) products. Use this manual along with the advanced diagnostic tests to troubleshoot problems.

The manual is divided into sections as follows:

- The common sections provide general information, guidelines, and safety information required in servicing computers.
- The product-specific section includes service, reference, and product-specific parts information.

Important

This manual is intended for trained service personnel who are familiar with ThinkPad products. Use this manual along with the advanced diagnostic tests to troubleshoot problems effectively.

Before servicing a ThinkPad product, be sure to review the safety information under "Safety notices: multilingual translations" on page 7, "Safety information" on page 13, and "Laser compliance statement" on page 17.

© Copyright Lenovo 2006, 2007

Downloaded from www.Manualslib.com manuals search engine

Downloaded from www.Manualslib.com manuals search engine

Introduction

Important service information

Important

BIOS and device driver fixes are customer-installable. The BIOS and device drivers are posted on the customer support site `http://www.lenovo.com/support`

Advise customers to contact the Customer Support Center at 800-426-7378 if they need assistance in obtaining or installing any software fixes, drivers, and BIOS downloads.

Customers in Canada should call the Customer Support Center at 800-565-3344 for assistance or download information.

Strategy for replacing FRUs

Before replacing parts

Make sure that all software fixes, drivers, and BIOS downloads are installed before replacing any FRUs listed in this manual.

To download software fixes, drivers, and BIOS, do as follows:

1. Go to `http://www.lenovo.com/support`
2. Enter the product number of the computer or press Auto-detect button on the screen.
3. Select **Downloads and drivers**.
4. Follow the directions on the screen and install the necessary software.

Use the following strategy to prevent unnecessary expense for replacing and servicing FRUs:

- **If you are instructed to replace a FRU but the replacement does not correct the problem, reinstall the original FRU before you continue**.
- Some computers have both a processor board and a system board. If you are instructed to replace either the processor board or the system board, and replacing one of them does not correct the problem, reinstall that board, and then replace the other one.
- If an adapter or a device consists of more than one FRU, any of the FRUs may be the cause of the error. Before replacing the adapter or device, remove the FRUs, one by one, to see if the symptoms change. Replace only the FRU that changed the symptoms.

Attention: The setup configuration on the computer you are servicing may have been customized. Running Automatic Configuration may alter the settings. Note the current configuration settings (using the View Configuration option); then, when service has been completed, verify that those settings remain in effect.

© Copyright Lenovo 2006, 2007

Downloaded from www.Manualslib.com manuals search engine

Strategy for replacing a hard disk drive

Always try to run a low-level format before replacing a hard disk drive.

Attention: The drive startup sequence in the computer you are servicing may have been changed. Be extremely careful during write operations such as copying, saving, or formatting. If you select an incorrect drive, data or programs can be overwritten.

Important notice for replacing a system board

Some components mounted on a system board are very sensitive. Improper handling of a system board can cause damage to those components, and may cause a system malfunction.

Attention: When handling a system board:

- Do not drop a system board or apply any excessive force to it.
- Avoid rough handling of any kind.
- Avoid bending a system board and hard pushing to prevent cracking at each BGA (Ball Grid Array) chipset.

How to use error messages

Use the error codes displayed on the screen to diagnose failures. If more than one error code is displayed, begin the diagnosis with the first error code. Whatever causes the first error code may also cause false error codes. If no error code is displayed, see whether the error symptom is listed in the Symptom-to-FRU Index for the computer you are servicing.

Strategy for replacing FRUs for CTO, CMV, and GAV

Product definition

Dynamic Configure To Order (CTO)
This provides the ability for a customer to configure an IBM® or a Lenovo solution from an eSite, and have this configuration sent to fulfillment, where it is built and shipped directly to the customer. The machine label, PC Entitlement Warehouse (PEW), eSupport, and the HMM will load these products as the 4-digit MT and 3-digit model, where model = “CTO” (Example: 1829-CTO).

Custom Model Variant (CMV)
This is a unique configuration that has been negotiated between IBM or Lenovo and the customer. A unique 4-digit MT and 3-digit model is provided to the customer to place orders (Example: 1829-W15). A CMV is a special bid offering. Therefore, it is NOT generally announced.

- The MTM portion of the machine label is the 4-digit MT and 3-digit model, where model = “CTO” (Example: 1829-CTO). The PRODUCT ID portion of the machine label is the 4-digit MT and 3-digit CMV model (Example: 1829-W15).
- The PEW record is the 4-digit MT and 3-digit model, where model = “CTO” (Example: 1829-CTO).
- eSupport will show both the CTO and CMV machine type models (Example: 1829-CTO and 1829-W15 will be found on the eSupport site.)
- The HMM will have the 4-digit MT and 3-digit CTO model only (Example: 1829-CTO). Again, CMVs are custom models and are not found in the HMM.

Downloaded from www.Manualslib.com manuals search engine

General Announce Variant (GAV)
This is a standard model (fixed configuration). GAVs are announced and offered to all customers. The MTM portion of the machine label is a 4-digit MT and 3-digit model, where model = a "fixed part number", not "CTO" (Example: 1829-F1U). Also, PEW, eSupport, and the HMM will list these products under the same fixed model number.

FRU identification for CTO, CMV, and GAV products

There are three information resources to identify which FRUs are used to support CTO, CMV, and GAV products. These sources are PEW, eSupport, and the HMM.

Using PEW

- **PEW** is the primary source for identifying FRU part numbers and FRU descriptions for the key commodities for CTO, CMV and GAV products at a MT - serial number level. An example of key commodities are hard disk drives, system boards, microprocessors, Liquid Crystal Displays (LCDs), and memory.
- Remember, All CTO and CMV products are loaded in PEW under the 4-digit MT and 3-digit model, where model = "CTO" (Example: 1829-CTO). GAVs are loaded in PEW under the 4-digit MT and 3-digit model, where model = a "fixed part number", not "CTO" (Example: 1829-F1U).
- PEW can be accessed at the following Web site:
  `http://w3-3.ibm.com/pc/entitle`

  Customers can also access PEW via
  `http://www-307.ibm.com/pc/support/site.wss/product.do?template=/warranty/warranty.vm&sitestyle=lenovo`
  Click on MACHINE LOOKUP, followed by WARRANTY INFORMATION. Input the MT and the Serial number and the list of key commodities will be returned in the PEW record under COMPONENT INFORMATION.
- **Business Partners** using Eclaim will access PEW when performing Entitlement Lookup. Business Partners will enter Loc ID, MT and Serial, and the key commodities will be returned in the Eclaim record under SYSTEM DETAILS.
- Authorized IBM Business Partners can access Eclaim at the following Web site:
  `https://wca.eclaim.com`

Using eSupport

For Key Commodities (Examples - hard disk drive, system board, microprocessor, LCD, and memory)

- eSupport can be used to view the list of key commodities built in a particular machine serial (this is the same record found in PEW).
- eSupport can be accessed at the following Web site: `http://www.lenovo.com/support`
- To view the key commodities, click on PARTS INFORMATION, then PARTS LOOKUP. Type in the model type and serial number. The key commodities will be returned in the eSupport record under PARTS SHIPPED WITH YOUR SYSTEM.

For the Remaining FRUs (the complete list of FRUs at the MT Model level)

- eSupport can be used to view the complete list of FRUs for a machine type and model.
- To view the complete list of FRUs, type in the machine type and model (Example: 1829-CTO) under QUICK PATH. Under "View by Document Type" select PARTS INFORMATION. Under "Filter by Category" select SERVICE

Downloaded from www.Manualslib.com manuals search engine

PARTS. Under “Parts Information by Date” select SYSTEM SERVICE PARTS. The list of service parts by description, with applicable machine type model and FRU will be displayed.

Using the HMM

Use the HMM as a back-up to PEW and eSupport to view the complete list of FRUs at the MT Model level.

Important information about replacing RoHS compliant FRUs

RoHS, The Restriction of Hazardous Substances in Electrical and Electronic Equipment Directive (2002/95/EC) is a European Union legal requirement affecting the global electronics industry. RoHS requirements must be implemented on Lenovo products placed on the market after June 2006. Products on the market before June 2006 are not required to have RoHS compliant parts. So, if the original FRU parts are non compliant, replacement parts can also be non compliant. In all cases if the original FRU parts are RoHS compliant the replacement part must also be RoHS compliant.

Lenovo plans to transition to RoHS compliance well before the implementation date and expects its suppliers to be ready to support Lenovo's requirements and schedule. Products sold in 2005 and 2006, will contain some RoHS compliant FRUs. The following statement pertains to these products and any product Lenovo produces containing RoHS compliant FRUs.

RoHS compliant FRUs have unique FRU part numbers. Before or after the RoHS implementation date, failed RoHS compliant parts must always be replaced using RoHS compliant FRUs, so only the FRUs identified as compliant in the system HMM or direct substitutions for those FRUs may be used.

Products marketed before June 2006		**Products marketed after June 2006**	
Current or original part	**Replacement FRU**	**Current or original part**	**Replacement FRU**
Non-RoHS	Can be Non-RoHS	Must be RoHS	Must be RoHS
Non-RoHS	Can be RoHS		
Non-RoHS	Can sub to RoHS		
RoHS	Must be RoHS		

Note: A direct substitution is a part with a different FRU part number that is automatically shipped by the distribution center at the time of the order.

Downloaded from www.Manualslib.com manuals search engine

Diskette compatibility matrix

The compatibility of each of the drives with the diskettes for it is as follows:

Diskette drive	Diskette capacity	Compatibility
3.5-inch	1.0 MB	Read and write
	2.0 MB	Read and write
	4.0 MB	Not compatible

Safety notices: multilingual translations

In this manual, safety notices appear in English with a page number reference to the appropriate multilingual, translated safety notice found in this section.

The following safety notices are provided in English, French, German, Hebrew, Italian, and Spanish.

Safety notice 1

Before the computer is powered on after FRU replacement, make sure all screws, springs, and other small parts are in place and are not left loose inside the computer. Verify this by shaking the computer and listening for rattling sounds. Metallic parts or metal flakes can cause electrical shorts.

Avant de remettre l'ordinateur sous tension après remplacement d'une unité en clientèle, vérifiez que tous les ressorts, vis et autres pièces sont bien en place et bien fixées. Pour ce faire, secouez l'unité et assurez-vous qu'aucun bruit suspect ne se produit. Des pièces métalliques ou des copeaux de métal pourraient causer un court-circuit.

Bevor nach einem FRU-Austausch der Computer wieder angeschlossen wird, muß sichergestellt werden, daß keine Schrauben, Federn oder andere Kleinteile fehlen oder im Gehäuse vergessen wurden. Der Computer muß geschüttelt und auf Klappergeräusche geprüft werden. Metallteile oder-splitter können Kurzschlüsse erzeugen.

לפני הפעלת המחשב לאחר החלפת FRU יש לוודא
שכל הברגים, הקפיצים, וחלקים קטנים אחרים נמצאים
במקומם ואינם חופשיים לזוז בתוך המחשב. כדי לוודא
זאת, יש לטלטל את המחשב ולהקשיב לגילוי קולות שקשוק.
חלקי או שבבי מתכת עלולים לגרום לקצרים חשמליים.

Prima di accendere l'elaboratore dopo che é stata effettuata la sostituzione di una FRU, accertarsi che tutte le viti, le molle e tutte le altri parti di piccole dimensioni siano nella corretta posizione e non siano sparse all'interno dell'elaboratore. Verificare ciò scuotendo l'elaboratore e prestando attenzione ad eventuali rumori; eventuali parti o pezzetti metallici possono provocare cortocircuiti pericolosi.

Antes de encender el sistema despues de sustituir una FRU, compruebe que todos los tornillos, muelles y demás piezas pequeñas se encuentran en su sitio y no se encuentran sueltas dentro del sistema. Compruébelo agitando el sistema y escuchando los posibles ruidos que provocarían. Las piezas metálicas pueden causar cortocircuitos eléctricos.

Downloaded from www.Manualslib.com manuals search engine

Safety notice 2

⚠ DANGER

Some standby batteries contain a small amount of nickel and cadmium. Do not disassemble a standby battery, recharge it, throw it into fire or water, or short-circuit it. Dispose of the battery as required by local ordinances or regulations. Use only the battery in the appropriate parts listing. Use of an incorrect battery can result in ignition or explosion of the battery.

Certaines batteries de secours contiennent du nickel et du cadmium. Ne les démontez pas, ne les rechargez pas, ne les exposez ni au feu ni à l'eau. Ne les mettez pas en court-circuit. Pour les mettre au rebut, conformez-vous à la réglementation en vigueur. Lorsque vous remplacez la pile de sauvegarde ou celle de l'horloge temps réel, veillez à n'utiliser que les modèles cités dans la liste de pièces détachées adéquate. Une batterie ou une pile inappropriée risque de prendre feu ou d'exploser.

Die Bereitschaftsbatterie, die sich unter dem Diskettenlaufwerk befindet, kann geringe Mengen Nickel und Cadmium enthalten. Sie darf nur durch die Verkaufsstelle oder den IBM Kundendienst ausgetauscht werden. Sie darf nicht zerlegt, wiederaufgeladen, kurzgeschlossen, oder Feuer oder Wasser ausgesetzt werden. Die Batterie kann schwere Verbrennungen oder Verätzungen verursachen. Bei der Entsorgung die örtlichen Bestimmungen für Sondermüll beachten. Beim Ersetzen der Bereitschafts-oder Systembatterie nur Batterien des Typs verwenden, der in der Ersatzteilliste aufgeführt ist. Der Einsatz falscher Batterien kann zu Entzündung oder Explosion führen.

**סוללות המתנה מסוימות מכילות כמות קטנה
של ניקל וקדמיום. אין לפרק סוללת המתנה,
לטעון אותה מחדש, להשליך אותה לאש או
למים או לקצר אותה. יש לסלק את הסוללה
כנדרש על ידי התקנות והחוקים המקומיים. יש
להשתמש רק בסוללה המופיעה ברשימת החלקים
המתאימה. שימוש בסוללה לא מתאימה עלול
לגרום להצתה או התפוצצות של הסוללה.**

Alcune batterie di riserva contengono una piccola quantità di nichel e cadmio. Non smontarle, ricaricarle, gettarle nel fuoco o nell'acqua né cortocircuitarle. Smaltirle secondo la normativa in vigore (DPR 915/82, successive disposizioni e disposizioni locali). Quando si sostituisce la batteria dell'RTC (real time clock) o la batteria di supporto, utilizzare soltanto i tipi inseriti nell'appropriato Catalogo parti. L'impiego di una batteria non adatta potrebbe determinare l'incendio o l'esplosione della batteria stessa.

Algunas baterías de reserva contienen una pequeña cantidad de níquel y cadmio. No las desmonte, ni recargue, ni las eche al fuego o al agua ni las cortocircuite. Deséchelas tal como dispone la normativa local. Utilice sólo baterías que se encuentren en la lista de piezas. La utilización de una batería no apropiada puede provocar la ignición o explosión de la misma.

Downloaded from www.Manualslib.com manuals search engine

Safety notice 3

⚠ DANGER

The battery pack contains small amounts of nickel. Do not disassemble it, throw it into fire or water, or short-circuit it. Dispose of the battery pack as required by local ordinances or regulations. Use only the battery in the appropriate parts listing when replacing the battery pack. Use of an incorrect battery can result in ignition or explosion of the battery.

La batterie contient du nickel. Ne la démontez pas, ne l'exposez ni au feu ni à l'eau. Ne la mettez pas en court-circuit. Pour la mettre au rebut, conformez-vous à la réglementation en vigueur. Lorsque vous remplacez la batterie, veillez à n'utiliser que les modèles cités dans la liste de pièces détachées adéquate. En effet, une batterie inappropriée risque de prendre feu ou d'exploser.

Akkus enthalten geringe Mengen von Nickel. Sie dürfen nicht zerlegt, wiederaufgeladen, kurzgeschlossen, oder Feuer oder Wasser ausgesetzt werden. Bei der Entsorgung die örtlichen Bestimmungen für Sondermüll beachten. Beim Ersetzen der Batterie nur Batterien des Typs verwenden, der in der Ersatzteilliste aufgeführt ist. Der Einsatz falscher Batterien kann zu Entzündung oder Explosion führen.

**מארז הסוללה מכיל כמות קטנה של ניקל
וקדמיום. אין לפרק את מארז הסוללה, להשליך
אותו לאש או למים או לקצר אותו. יש לסלק את
מארז הסוללה הסוללה כנדרש על ידי התקנות
והחוקים המקומיים. יש להשתמש רק בסוללה
המופיעה ברשימת החלקים המתאימה בזמן החלפת
מארז הסוללה. שימוש בסוללה לא מתאימה עלול
לגרום להצתה או התפוצצות של הסוללה.**

La batteria contiene piccole quantità di nichel. Non smontarla, gettarla nel fuoco o nell'acqua né cortocircuitarla. Smaltirla secondo la normativa in vigore (DPR 915/82, successive disposizioni e disposizioni locali). Quando si sostituisce la batteria, utilizzare soltanto i tipi inseriti nell'appropriato Catalogo parti. L'impiego di una batteria non adatta potrebbe determinare l'incendio o l'esplosione della batteria stessa.

Las baterías contienen pequeñas cantidades de níquel. No las desmonte, ni recargue, ni las eche al fuego o al agua ni las cortocircuite. Deséchelas tal como dispone la normativa local. Utilice sólo baterías que se encuentren en la lista de piezas al sustituir la batería. La utilización de una batería no apropiada puede provocar la ignición o explosión de la misma.

Downloaded from www.Manualslib.com manuals search engine

Safety notice 4

⚠ DANGER

The lithium battery can cause a fire, an explosion, or a severe burn. Do not recharge it, remove its polarized connector, disassemble it, heat it above 100°C (212°F), incinerate it, or expose its cell contents to water. Dispose of the battery as required by local ordinances or regulations. Use only the battery in the appropriate parts listing. Use of an incorrect battery can result in ignition or explosion of the battery.

La pile de sauvegarde contient du lithium. Elle présente des risques d'incendie, d'explosion ou de brûlures graves. Ne la rechargez pas, ne retirez pas son connecteur polarisé et ne la démontez pas. Ne l'exposez pas à une temperature supérieure à 100°C, ne la faites pas brûler et n'en exposez pas le contenu à l'eau. Mettez la pile au rebut conformément à la réglementation en vigueur. Une pile inappropriée risque de prendre feu ou d'exploser.

Die Systembatterie ist eine Lithiumbatterie. Sie kann sich entzünden, explodieren oder schwere Verbrennungen hervorrufen. Batterien dieses Typs dürfen nicht aufgeladen, zerlegt, über 100 C erhitzt oder verbrannt werden. Auch darf ihr Inhalt nicht mit Wasser in Verbindung gebracht oder der zur richtigen Polung angebrachte Verbindungsstecker entfernt werden. Bei der Entsorgung die örtlichen Bestimmungen für Sondermüll beachten. Beim Ersetzen der Batterie nur Batterien des Typs verwenden, der in der Ersatzteilliste aufgeführt ist. Der Einsatz falscher Batterien kann zu Entzündung oder Explosion führen.

סוללת הליתיום עלולה לגרום לשריפה, להתפוצצות או לכוויות קשות. אין לטעון אותה מחדש, לסלק את המחבר המקוטב שלה, לפרק אותה או לחמם אותה לטמפרטורה העולה על 100 מעלות צלזיוס. אין לשרוף את הסוללה ואין לחשוף את תוכן התא למים. יש לסלק את הסוללה כנדרש בתקנות ובחוקים המקומיים. יש להשתמש רק בסוללה המופיעה ברשימת החלקים המתאימים. שימוש בסוללה אחרת עלול לגרום לסכנת שריפה או התפוצצות.

La batteria di supporto e una batteria al litio e puo incendiarsi, esplodere o procurare gravi ustioni. Evitare di ricaricarla, smontarne il connettore polarizzato, smontarla, riscaldarla ad una temperatura superiore ai 100 gradi centigradi, incendiarla o gettarla in acqua. Smaltirla secondo la normativa in vigore (DPR 915/82, successive disposizioni e disposizioni locali). L'impiego di una batteria non adatta potrebbe determinare l'incendio o l'esplosione della batteria stessa.

La batería de repuesto es una batería de litio y puede provocar incendios, explosiones o quemaduras graves. No la recargue, ni quite el conector polarizado, ni la desmonte, ni caliente por encima de los 100°C (212°F), ni la incinere ni exponga el contenido de sus celdas al agua. Deséchela tal como dispone la normativa local.

Downloaded from www.Manualslib.com manuals search engine

Safety notice 5

If the LCD breaks and the fluid from inside the LCD gets into your eyes or on your hands, immediately wash the affected areas with water for at least 15 minutes. Seek medical care if any symptoms from the fluid are present after washing.

Si le panneau d'affichage à cristaux liquides se brise et que vous recevez dans les yeux ou sur les mains une partie du fluide, rincez-les abondamment pendant au moins quinze minutes. Consultez un médecin si des symptômes persistent après le lavage.

Die Leuchtstoffröhre im LCD-Bildschirm enthält Quecksilber. Bei der Entsorgung die örtlichen Bestimmungen für Sondermüll beachten. Der LCD-Bildschirm besteht aus Glas und kann zerbrechen, wenn er unsachgemäß behandelt wird oder der Computer auf den Boden fällt. Wenn der Bildschirm beschädigt ist und die darin befindliche Flüssigkeit in Kontakt mit Haut und Augen gerät, sollten die betroffenen Stellen mindestens 15 Minuten mit Wasser abgespült und bei Beschwerden anschließend ein Arzt aufgesucht werden.

אם מסך הגביש הנוזלי (LCD) נשבר והנוזל מתוך המסך בא במגע
עם עיניכם או ידיכם, שטפו את האזורים הנגועים מיד במים במשך
15 דקות לפחות. פנו לקבלת עזרה רפואית אם תסמינים הנובעים
מהמגע עם הנוזל נמשכים לאחר השטיפה.

Nel caso che caso l'LCD si dovesse rompere ed il liquido in esso contenuto entrasse in contatto con gli occhi o le mani, lavare immediatamente le parti interessate con acqua corrente per almeno 15 minuti; poi consultare un medico se i sintomi dovessero permanere.

Si la LCD se rompe y el fluido de su interior entra en contacto con sus ojos o sus manos, lave inmediatamente las áreas afectadas con agua durante 15 minutos como mínimo. Obtenga atención medica si se presenta algún síntoma del fluido despues de lavarse.

Safety notice 6

⚠ DANGER

To avoid shock, do not remove the plastic cover that protects the lower part of the inverter card.

Afin d'éviter tout risque de choc électrique, ne retirez pas le cache en plastique protégeant la partie inférieure de la carte d'alimentation.

Aus Sicherheitsgründen die Kunststoffabdeckung, die den unteren Teil der Spannungswandlerplatine umgibt, nicht entfernen.

כדי למנוע התחשמלות, אין להסיר את מכסה הפלסטיק
המגן על חלקו התחתון של הכרטיס ההפוך.

Per evitare scosse elettriche, non rimuovere la copertura in plastica che avvolge la parte inferiore della scheda invertitore.

Para evitar descargas, no quite la cubierta de plástico que rodea la parte baja de la tarjeta invertida.

Downloaded from www.Manualslib.com manuals search engine

Safety notice 7

⚠ DANGER

Though the main batteries have low voltage, a shorted or grounded battery can produce enough current to burn personnel or combustible materials.

Bien que le voltage des batteries principales soit peu élevé, le court-circuit ou la mise à la masse d'une batterie peut produire suffisamment de courant pour brûler des matériaux combustibles ou causer des brûlures corporelles graves.

Obwohl Hauptbatterien eine niedrige Spannung haben, können sie doch bei Kurzschluß oder Erdung genug Strom abgeben, um brennbare Materialien zu entzünden oder Verletzungen bei Personen hervorzurufen.

אף שהסוללות הראשיות הן בעלות מתח נמוך, סוללה מקוצרת או מוארקת עלולה להפיק זרם מספיק לגרימת כוויות או להצתת חומרים דליקים.

Sebbene le batterie di alimentazione siano a basso voltaggio, una batteria in corto circuito o a massa può fornire corrente sufficiente da bruciare materiali combustibili o provocare ustioni ai tecnici di manutenzione.

Aunque las baterías principales tienen un voltaje bajo, una batería cortocircuitada o con contacto a tierra puede producir la corriente suficiente como para quemar material combustible o provocar quemaduras en el personal.

Safety notice 8

⚠ DANGER

Before removing any FRU, power off the computer, unplug all power cords from electrical outlets, remove the battery pack, and then disconnect any interconnecting cables.

Avant de retirer une unité remplaçable en clientèle, mettez le système hors tension, débranchez tous les cordons d'alimentation des socles de prise de courant, retirez la batterie et déconnectez tous les cordons d'interface.

Die Stromzufuhr muß abgeschaltet, alle Stromkabel aus der Steckdose gezogen, der Akku entfernt und alle Verbindungskabel abgenommen sein, bevor eine FRU entfernt wird.

לפני סילוק FRU כלשהו, יש לכבות את המחשב, לנתק את כל כבלי החשמל משקעי החשמל, להוציא את מארז הסוללה, ואז לנתק כבלי חיבור אחרים אם יש כאלה.

Prima di rimuovere qualsiasi FRU, spegnere il sistema, scollegare dalle prese elettriche tutti i cavi di alimentazione, rimuovere la batteria e poi scollegare i cavi di interconnessione.

Antes de quitar una FRU, apague el sistema, desenchufe todos los cables de las tomas de corriente eléctrica, quite la batería y, a continuación, desconecte cualquier cable de conexión entre dispositivos.

Downloaded from www.Manualslib.com manuals search engine

Safety information

The following section presents safety information with which you need to be familiar before you service a ThinkPad computer.

General safety

Follow these rules to ensure general safety:

- Observe good housekeeping in the area of the machines during and after maintenance.
- When lifting any heavy object:
  1. Make sure that you can stand safely without slipping.
  2. Distribute the weight of the object equally between your feet.
  3. Use a slow lifting force. Never move suddenly or twist when you attempt to lift.
  4. Lift by standing or by pushing up with your leg muscles; this action removes the strain from the muscles in your back. *Do not attempt to lift any object that weighs more than 16 kg (35 lb) or that you think is too heavy for you.*
- Do not perform any action that causes hazards to the customer, or that makes the equipment unsafe.
- Before you start the machine, make sure that other service representatives and the customer's personnel are not in a hazardous position.
- Place removed covers and other parts in a safe place, away from all personnel, while you are servicing the machine.
- Keep your toolcase away from walk areas so that other people will not trip over it.
- Do not wear loose clothing that can be trapped in the moving parts of a machine. Make sure that your sleeves are fastened or rolled up above your elbows. If your hair is long, fasten it.
- Insert the ends of your necktie or scarf inside clothing or fasten it with a nonconductive clip, about 8 centimeters (3 inches) from the end.
- Do not wear jewelry, chains, metal-frame eyeglasses, or metal fasteners for your clothing.

  Attention: Metal objects are good electrical conductors.
- Wear safety glasses when you are hammering, drilling, soldering, cutting wire, attaching springs, using solvents, or working in any other conditions that might be hazardous to your eyes.
- After service, reinstall all safety shields, guards, labels, and ground wires. Replace any safety device that is worn or defective.
- Reinstall all covers correctly before returning the machine to the customer.
- Fan louvers on the machine help to prevent overheating of internal components. Do not obstruct fan louvers or cover them with labels or stickers.

Electrical safety

Observe the following rules when working on electrical equipment.

Downloaded from www.Manualslib.com manuals search engine

Important

Use only approved tools and test equipment. Some hand tools have handles covered with a soft material that does not insulate you when working with live electrical currents.

Many customers have, near their equipment, rubber floor mats that contain small conductive fibers to decrease electrostatic discharges. Do not use this type of mat to protect yourself from electrical shock.

- Find the room emergency power-off (EPO) switch, disconnecting switch, or electrical outlet. If an electrical accident occurs, you can then operate the switch or unplug the power cord quickly.
- Do not work alone under hazardous conditions or near equipment that has hazardous voltages.
- Disconnect all power before:
  - Performing a mechanical inspection
  - Working near power supplies
  - Removing or installing main units
- Before you start to work on the machine, unplug the power cord. If you cannot unplug it, ask the customer to power-off the wall box that supplies power to the machine, and to lock the wall box in the off position.
- If you need to work on a machine that has *exposed* electrical circuits, observe the following precautions:
  - Ensure that another person, familiar with the power-off controls, is near you.

    Attention: Another person must be there to switch off the power, if necessary.
  - Use only one hand when working with powered-on electrical equipment; keep the other hand in your pocket or behind your back.

    Attention: An electrical shock can occur only when there is a complete circuit. By observing the above rule, you may prevent a current from passing through your body.
  - When using testers, set the controls correctly and use the approved probe leads and accessories for that tester.
  - Stand on suitable rubber mats (obtained locally, if necessary) to insulate you from grounds such as metal floor strips and machine frames.

  Observe the special safety precautions when you work with very high voltages; Instructions for these precautions are in the safety sections of maintenance information. Use extreme care when measuring high voltages.
- Regularly inspect and maintain your electrical hand tools for safe operational condition.
- Do not use worn or broken tools and testers.
- *Never assume* that power has been disconnected from a circuit. First, *check* that it has been powered off.
- Always look carefully for possible hazards in your work area. Examples of these hazards are moist floors, nongrounded power extension cables, power surges, and missing safety grounds.
- Do not touch live electrical circuits with the reflective surface of a plastic dental mirror. The surface is conductive; such touching can cause personal injury and machine damage.

Downloaded from www.Manualslib.com manuals search engine

- Do not service the following parts *with the power on* when they are removed from their normal operating places in a machine:
  - Power supply units
  - Pumps
  - Blowers and fans
  - Motor generators

  and similar units. (This practice ensures correct grounding of the units.)
- If an electrical accident occurs:
  - Use caution; do not become a victim yourself.
  - Switch off power.
  - Send another person to get medical aid.

Safety inspection guide

The purpose of this inspection guide is to assist you in identifying potentially unsafe conditions. As each machine was designed and built, required safety items were installed to protect users and service personnel from injury. This guide addresses only those items. You should use good judgment to identify potential safety hazards due to attachment of non-ThinkPad features or options not covered by this inspection guide.

If any unsafe conditions are present, you must determine how serious the apparent hazard could be and whether you can continue without first correcting the problem.

Consider these conditions and the safety hazards they present:

- Electrical hazards, especially primary power (primary voltage on the frame can cause serious or fatal electrical shock)
- Explosive hazards, such as a damaged CRT face or a bulging capacitor
- Mechanical hazards, such as loose or missing hardware

To determine whether there are any potentially unsafe conditions, use the following checklist at the beginning of every service task. Begin the checks with the power off, and the power cord disconnected.

Checklist:

1. Check exterior covers for damage (loose, broken, or sharp edges).
2. Power off the computer. Disconnect the power cord.
3. Check the power cord for:
   a. A third-wire ground connector in good condition. Use a meter to measure third-wire ground continuity for 0.1 ohm or less between the external ground pin and the frame ground.
   b. The power cord should be the type specified in the parts list.
   c. Insulation must not be frayed or worn.
4. Check for cracked or bulging batteries.
5. Remove the cover.
6. Check for any obvious non-ThinkPad alterations. Use good judgment as to the safety of any non-ThinkPad alterations.
7. Check inside the unit for any obvious unsafe conditions, such as metal filings, contamination, water or other liquids, or signs of fire or smoke damage.
8. Check for worn, frayed, or pinched cables.

Downloaded from www.Manualslib.com manuals search engine

9. Check that the power-supply cover fasteners (screws or rivets) have not been removed or tampered with.

Handling devices that are sensitive to electrostatic discharge

Any computer part containing transistors or integrated circuits (ICs) should be considered sensitive to electrostatic discharge (ESD.) ESD damage can occur when there is a difference in charge between objects. Protect against ESD damage by equalizing the charge so that the machine, the part, the work mat, and the person handling the part are all at the same charge.

Notes

1. Use product-specific ESD procedures when they exceed the requirements noted here.
2. Make sure that the ESD protective devices you use have been certified (ISO 9000) as fully effective.

When handling ESD-sensitive parts:

- Keep the parts in protective packages until they are inserted into the product.
- Avoid contact with other people.
- Wear a grounded wrist strap against your skin to eliminate static on your body.
- Prevent the part from touching your clothing. Most clothing is insulative and retains a charge even when you are wearing a wrist strap.
- Use the black side of a grounded work mat to provide a static-free work surface. The mat is especially useful when handling ESD-sensitive devices.
- Select a grounding system, such as those listed below, to provide protection that meets the specific service requirement.

Note

The use of a grounding system to guard against ESD damage is desirable but not necessary.

  - Attach the ESD ground clip to any frame ground, ground braid, or green-wire ground.
  - When working on a double-insulated or battery-operated system, use an ESD common ground or reference point. You can use coax or connector-outside shells on these systems.
  - Use the round ground prong of the ac plug on ac-operated computers.

Grounding requirements

Electrical grounding of the computer is required for operator safety and correct system function. Proper grounding of the electrical outlet can be verified by a certified electrician.

Downloaded from www.Manualslib.com manuals search engine

Laser compliance statement

Some models of ThinkPad computer are equipped from the factory with an optical storage device such as a CD-ROM drive or a DVD-ROM drive. Such devices are also sold separately as options. If one of these drives is installed, it is certified in the U.S. to conform to the requirements of the Department of Health and Human Services 21 Code of Federal Regulations (DHHS 21 CFR) Subchapter J for Class 1 laser products. Elsewhere, the drive is certified to conform to the requirements of the International Electrotechnical Commission (IEC) 825 and CENELEC EN 60 825 for Class 1 laser products.

If a CD-ROM drive, a DVD-ROM drive, or another laser device is installed, note the following:

⚠ **CAUTION:**

Use of controls or adjustments or performance of procedures other than those specified herein might result in hazardous radiation exposure.

O uso de controles, ajustes ou desempenho de procedimentos diferentes daqueles aqui especificados pode resultar em perigosa exposição à radiação.

**凡未在这里指明的任何控制用法、调整、行为，
都会导致严重后果。**

Pour éviter tout risque d'exposition au rayon laser, respectez les consignes de réglage et d'utilisation des commandes, ainsi que les procédures décrites.

Werden Steuer- und Einstellelemente anders als hier festgesetzt verwendet, kann gefährliche Laserstrahlung auftreten.

Az itt előírt eljárásoktól, beállításoktól és vezérlésektől
eltérni a lézersugárzás veszélye miatt kockázatos !

L'utilizzo di controlli, regolazioni o l'esecuzione di procedure diverse da quelle specificate possono provocare l'esposizione a.

Использование элементов настройки и
выполнение процедур иных, чем указано
здесь, может привести к опасному
радиационному облучению.

Použitie kontrôl, úprav alebo iných vykonaní od iných
výrobcov, ako je v tomto špecifikované, mohlo by mať
za následok nebezpečenstvo vystavenia sa vyžiarovaniu.

El uso de controles o ajustes o la ejecución de procedimientos distintos de los aquí especificados puede provocar la exposición a radiaciones peligrosas.

Opening the CD-ROM drive, the DVD-ROM drive, or any other optical storage device could result in exposure to hazardous laser radiation. There are no serviceable parts inside those drives. **Do not open.**

Downloaded from www.Manualslib.com manuals search engine

A CD-ROM drive, a DVD-ROM drive, or any other storage device installed may contain an embedded Class 3A or Class 3B laser diode. Note the following:

⚠ DANGER

Emits visible and invisible laser radiation when open. Do not stare into the beam, do not view directly with optical instruments, and avoid direct exposure to the beam.

Radiação por raio laser ao abrir. Não olhe fixo no feixe de luz, não olhe diretamente por meio de instrumentos óticos e evite exposição direta com o feixe de luz.

开启时会有激光发射时，请勿盯视激光光束，请勿直接查看
视觉仪器，并且避免直接接触在激光光束之中。

Rayonnement laser si carter ouvert. Évitez de fixer le faisceau, de le regarder directement avec des instruments optiques, ou de vous exposer au rayon.

Laserstrahlung bei geöffnetem Gerät. Nicht direkt oder über optische Instrumente in den Laserstrahl sehen und den Strahlungsbereich meiden.

Kinyitáskor lézersugár ! Ne nézzen bele se szabad szemmel, se optikai eszközökkel. Kerülje a sugárnyalábbal való érintkezést !.

Aprendo l'unità vengono emesse radiazioni laser. Non fissare il fascio, non guardarlo direttamente con strumenti ottici e evitare l'esposizione diretta al fascio.

Открывая, берегитесь лазерного излучения.
Не смотрите на луч, не разглядывайте его
с помощью оптических инструментов, а также
избегайте прямого воздействия лазерного луча.

Keď je laserová jednotka otvorená. Vyhnite sa priamemu
pohľadu a nehľadte priamo s optickými nástrojmi do ľúča
a vyhnite sa priamemu vystaveniu ľúčov.

Radiación láser al abrir. No mire fijamente ni examine con instrumental óptico el haz de luz. Evite la exposición directa al haz.

Downloaded from www.Manualslib.com manuals search engine

General descriptions

The descriptions in this chapter apply to any ThinkPad model that has the PC-Doctor® for DOS diagnostics program. Some descriptions might not apply to your particular computer.

Read this first

Before you go to the checkout guide, be sure to read this section.

Important notes

- **Only certified trained personnel should service the computer.**
- **Before replacing any FRU, read the entire page on removing and replacing FRUs.**
- **When you replace FRUs, use new nylon-coated screws.**
- **Be extremely careful during such write operations as copying, saving, or formatting.** Drives in the computer that you are servicing sequence might have been altered. If you select an incorrect drive, data or programs might be overwritten.
- **Replace a FRU only with another FRU of the correct model.** When you replace a FRU, make sure that the model of the machine and the FRU part number are correct by referring to the FRU parts list.
- **A FRU should not be replaced because of a single, unreproducible failure.** Single failures can occur for a variety of reasons that have nothing to do with a hardware defect, such as cosmic radiation, electrostatic discharge, or software errors. Consider replacing a FRU only when a problem recurs. If you suspect that a FRU is defective, clear the error log and run the test again. If the error does not recur, do not replace the FRU.
- **Be careful not to replace a nondefective FRU.**

What to do first

When you do return a FRU, you must include the following information in the parts exchange form or parts return form that you attach to it:

__ 1. Name and phone number of servicer
__ 2. Date of service
__ 3. Date on which the machine failed
__ 4. Date of purchase
__ 5. Failure symptoms, error codes appearing on the display, and beep symptoms
__ 6. Procedure index and page number in which the failing FRU was detected
__ 7. Failing FRU name and part number
__ 8. Machine type, model number, and serial number
__ 9. Customer's name and address

Note for warranty:
During the warranty period, the customer may be responsible for repair costs if the computer damage was caused by misuse, accident, modification, unsuitable physical or operating environment, or improper maintenance by the customer.

© Copyright Lenovo 2006, 2007

Downloaded from www.Manualslib.com manuals search engine

Following is a list of some common items that are not covered under warranty and some symptoms that might indicate that the system was subjected to stress beyond normal use.

Before checking problems with the computer, determine whether the damage is covered under the warranty by referring to the following list:

The following are not covered under warranty:
- LCD panel cracked from the application of excessive force or from being dropped
- Scratched (cosmetic) parts
- Distortion, deformation, or discoloration of the cosmetic parts
- Plastic parts, latches, pins, or connectors that have been cracked or broken by excessive force
- Damage caused by liquid spilled into the system
- Damage caused by the improper insertion of a PC Card or the installation of an incompatible card
- Improper disc insertion or use of an optical drive
- Diskette drive damage caused by pressure on the diskette drive cover, foreign material in the drive, or the insertion of a diskette with multiple labels
- Damaged or bent diskette eject button
- Fuses blown by attachment of a nonsupported device
- Forgotten computer password (making the computer unusable)
- Sticky keys caused by spilling a liquid onto the keyboard
- Use of an incorrect ac adapter on laptop products

The following symptoms might indicate damage caused by nonwarranted activities:
- Missing parts might be a symptom of unauthorized service or modification.
- If the spindle of a hard disk drive becomes noisy, it may have been subjected to excessive force, or dropped.

Downloaded from www.Manualslib.com manuals search engine

Related service information

This section provides information about the following:
- "Service Web site"
- "Restoring the factory contents by using Product Recovery discs"
- "Passwords" on page 22
- "Power management" on page 24

Service Web site

When the latest maintenance diskette and the system program service diskette become available, they will be posted on `http://www.lenovo.com/spm`

Restoring the factory contents by using Product Recovery discs

When the hard disk drive is replaced because of a failure, no Product Recovery program is on the new hard disk. In this case, you must use the recovery discs for the computer. Order the recovery discs and the hard disk drive at the same time so that you can recover the new hard disk drive with the pre-installed software when they arrive. For information on which discs to order, see "Recovery discs" on page 118.

To install the factory contents by using Product Recovery discs, do the following:

Note
The recovery process might take up to 2 hours.

1. Insert the **Rescue and Recovery™ Disk1 of 1** into the optical drive, then restart the computer. This will take several minutes.
2. When the "Welcome to Rescue and Recovery" screen is displayed, press **Continue**. In the Rescue and Recovery menu, select **Restore Your System**. A message giving a warning that USB devices used in recovery must be connected when the computer is turned on appears. Click **OK**.
3. "Restore Your System" window appears. Select **Restore my hard drive to the original factory state**, and click **Next**. A warning appears, click **Yes**. Then next menu appears. Select **I do not want to save any files** and click **Next**. Following menu appears with a warning, select **Next**. A warning appears not to power down the computer during the recovery process. Click **OK**. One more warning appears saying that recovery is intended only for unrecoverable system problems. Click **OK**.
4. The Terms and Conditions window appears, select **I accept these terms and conditions** and press **OK**. Previous menus may remain on the screen, but the Predesktop installer begins copying files. When this completes, the computer will restart and a window will ask you to insert a Product Recovery Supplemental Disk, if you have one. Press **No**.
5. You will then be prompted to insert Product Recovery Disk 1 into the optical drive. Insert the Product Recovery Disk 1 into the optical drive, and press **OK**. In similar fashion, you will be prompted to insert the remaining recovery discs until all the files are copied.
6. After all the files are copied, the computer will restart and return to the "Welcome to Rescue and Recovery" screen where a window "Recovering your system, this may take several minutes" appears and .IMZ files are processed.

Downloaded from www.Manualslib.com manuals search engine

A total progress bar allows you to audit this process, which will take about 8 minutes. The final recovery disc may be safely removed during this time, but may also be left in the optical drive since it is not bootable.

7. You will then be prompted to restart the computer. Select **Yes**. A warning window appears, giving you one last chance to stop the restart, but disappears automatically after about 5 seconds. File processing continues in DOS full screen mode for about two minutes and the computer restarts to the Windows® desktop. No user intervention is required (and should be avoided) after this point.
8. Windows setup continues on the desktop and DOS window for IBM system setup, with progress measured by a Factory Preinstallation window on the right side of the screen. The processes updating installed softwares.

   A warning that antivirus software is not installed appears repeatedly in the system tray, but this should be ignored.The entire process at desktop takes about 25 minutes.
9. Then the computer restarts, does some more DOS full screen processing, and restarts again to a Windows desktop where factory preinstallation continues for about 12 more minutes, another restart to a DOS screen and then back to the Windows splash screen and back to the desktop for more preinstallation.

   This lasts about 10 more minutes and the computer restarts to do NTFS conversion and then restarts to the OOBE (Out of Box Experience) environment.

Passwords

As many as three passwords may be needed for any ThinkPad computer: the power-on password (POP), the hard-disk password (HDP), and the supervisor password (SVP).

If any of these passwords has been set, a prompt for it appears on the screen whenever the computer is turned on. The computer does not start until the password is entered.

Exception: If only an SVP is installed, the password prompt does not appear when the operating system is booted.

Power-on password:
A power-on password (POP) protects the system from being powered on by an unauthorized person. The password must be entered before an operating system can be booted.

Hard-disk password:
There are two hard-disk passwords (HDPs):

- User HDP—for the user
- Master HDP—for the system administrator, who can use it to get access to the hard disk even if the user has changed the user HDP

Note: There are two modes for the HDP: **User only** and **Master + User**. The **Master + User** mode requires two HDPs; the system administrator enters both in the same operation. The system administrator then provides the user HDP to the system user.

Downloaded from www.Manualslib.com manuals search engine

Attention: If the user HDP has been forgotten, check whether a master HDP has been set. If it has, it can be used for access to the hard disk drive. If no master HDP is available, neither Lenovo nor Lenovo authorized servicers provide any services to reset either the user or the master HDP, or to recover data from the hard disk drive. The hard disk drive can be replaced for a scheduled fee.

Supervisor password:
A supervisor password (SVP) protects the system information stored in the BIOS Setup Utility. The user must enter the SVP in order to get access to the BIOS Setup Utility and change the system configuration.

Attention: If the SVP has been forgotten and cannot be made available to the servicer, there is no service procedure to reset the password. The system board must be replaced for a scheduled fee.

How to remove the power-on password

To remove a POP that you have forgotten, do the following:

(A) If no SVP has been set:

1. Turn off the computer.
2. Remove the battery pack.

   For how to remove the battery pack, see "1010 Battery pack" on page 54.
3. Remove the backup battery.

   For how to remove the backup battery, see "1060 Backup battery" on page 64.
4. Turn on the computer and wait until the POST ends.

   After the POST ends, the password prompt does not appear. The POP has been removed.
5. Reinstall the backup battery and the battery pack.

(B) If an SVP has been set and is known by the servicer:

1. Turn on the computer; then, while the "To interrupt normal startup, press the blue ThinkVantage button" message is displayed at the lower-left of the screen, press the ThinkVantage® button. The Rescue and Recovery screen opens.

   For models supporting the Passphrase function, press F1 while the POP icon is appearing on the screen; then enter the POP. For the other models, enter the POP.

   Note: To check whether the ThinkPad computer supports the Passphrase function, enter the BIOS Setup Utility and go to **Security** --> **Password**. If the **Using Passphrase** item is displayed in the menu, this function is available on the ThinkPad computer.
2. Click **Access BIOS**. The system Restart Required window is displayed.
3. Click **Yes**. The computer restarts, and the BIOS Setup Utility screen opens.
4. Select **Security**, using the cursor directional keys to move down the menu.
5. Select **Password**.
6. Select **Power-On Password**.
7. Type the current SVP in the **Enter Current Password** field. then leave the **Enter New Password** field blank, and press Enter twice.
8. In the Changes have been saved window, press Enter.
9. Press F10; then, in the Setup confirmation window, select **Yes** .

Downloaded from www.Manualslib.com manuals search engine

How to remove the hard-disk password

Attention: If **User only** mode is selected and the user HDP has been forgotten and cannot be made available to the servicer, neither Lenovo nor Lenovo authorized servicers provide any services to reset the user HDPs or to recover data from the hard disk drive. The hard disk drive can be replaced for a scheduled fee.

To remove a user HDP that has been forgotten, when the SVP and the master HDP are known, do the following:

1. Turn on the computer; then, while the "To interrupt normal startup, press the blue ThinkVantage button" message is displayed at the lower-left of the screen, press the ThinkVantage button. The Rescue and Recovery screen opens.

   For models supporting the Passphrase function, press F1 while HDP icon is appearing on the screen; then enter the master HDP. For the other models, enter the master HDP.

   Note: To check whether the ThinkPad computer supports the Passphrase function, enter the BIOS Setup Utility and go to **Security** --> **Password**. If **Using Passphrase** item is displayed in the menu, this function is available on the ThinkPad computer.
2. Click **Access BIOS**. The system Restart Required window is displayed.
3. Click **Yes**. The computer restarts, and the BIOS Setup Utility screen opens.
4. Select **Security**, using the cursor directional keys to move down the menu.
5. Select **Password**.
6. Select **Hard-disk** *x* **password**, where *x* is the letter of the hard disk drive. A pop-up window opens.
7. Select **Master HDP**.
8. Type the current master HDP in the **Enter Current Password** field. then leave the **Enter New Password** field blank, and press Enter twice.
9. Press F10.
10. Select **Yes** in the Setup Configuration window.

    Both user HDP and master HDP will have been removed.

Power management

To reduce power consumption, the computer has three power management modes: screen blank, standby, and hibernation.

Screen blank mode

If the time set on the "Turn off monitor" timer in the operating system expires, the LCD backlight turns off.

To put the computer into screen blank mode, press the ThinkVantage button and use the ThinkVantage Productivity Center.

To end screen blank mode and resume normal operation, press any key.

Standby mode

When the computer enters standby mode, the following events occur in addition to what occurs in screen blank mode:

- The LCD is powered off.
- The hard disk drive is powered off.
- The CPU stops.

Downloaded from www.Manualslib.com manuals search engine

To enter standby mode, press Fn+F4.

Note: If you are using the ACPI operating system, you can change the action of Fn+F4.

In certain circumstances, the computer goes into standby mode automatically:

- If a "suspend time" has been set on the timer, and the user does not do any operation with the keyboard, the TrackPoint®, the hard disk, the parallel connector, or the diskette drive within that time.
- If the battery indicator blinks orange, indicating that the battery power is low. (Alternatively, if **Hibernate when battery becomes low** has been selected in the "Power Management Properties" window, the computer goes into hibernation mode.)

Note for the APM operating system:
Even if you do not set the low-battery alarm, the charge indicator notifies you when the battery is low, and then the computer enters the power-saving mode automatically. This default low-battery behavior is independent of the operating system; so if you have set the low-battery alarm, the computer may not do what you specified. It chooses either your setting or the default setting, whichever is appropriate.

If you are using the ACPI operating system, only the low-battery alarm is available.

To cause the computer to return from standby mode and resume operation, do one of the following:

- Press the Fn key.
- Open the LCD cover.
- Turn on the power switch.

Also, in either of the following events, the computer automatically returns from standby mode and resumes operation:

- The ring indicator (RI) is signaled by a serial device or a PC Card device.
- The time set on the resume timer elapses.

Note: The computer does not accept any input immediately after it enters standby mode. Wait a few seconds before taking any action to reenter operation mode.

Hibernation mode

In hibernation mode, the following occurs:

- The system status, RAM, VRAM, and setup data are stored on the hard disk.
- The system is powered off.

Note: If the computer enters the hibernation mode while it is docked to the ThinkPad X6 Tablet UltraBase, do not undock it before resuming normal operation. If you do undock it and then try to resume normal operation, you will get an error message, and you will have to restart the system.

To cause the computer to enter hibernation mode, do any of the following:

- Press the Fn+F12 keys.
- If you are using the APM operating system and have set the mode to **Power switch mode [Hibernation]**, turn off the power switch.

Downloaded from www.Manualslib.com manuals search engine

- If you are using the ACPI operating system and have defined one of the following actions as the event that causes the system to go into hibernation mode, perform that action.
  - Closing the lid.
  - Pressing the power button.
  - Pressing Fn+F4 keys.

Also, the computer goes into hibernation mode automatically in either of the following conditions:

- If a "hibernation time" has been set on the timer, and if the user does not do any operation with the keyboard, the TrackPoint, the hard disk drive, the parallel connector, or the diskette drive within that time.
- If the timer conditions are satisfied in suspend mode.
- If you are using the APM operating system and have set the mode to **Hibernate when battery becomes low**, and the battery charge becomes critically low.

When the power is turned on, the computer returns from hibernation mode and resumes operation. The hibernation file in the boot record on the hard disk drive is read, and system status is restored from the hard disk drive.

Downloaded from www.Manualslib.com manuals search engine

Checkout guide

Use the following procedures as a guide in identifying and correcting problems with the ThinkPad computer.

Note: The diagnostic tests are intended to test only ThinkPad products. The use of non-ThinkPad products, prototype cards, or modified options can lead to false indications of errors and invalid system responses.

1. Identify the failing symptoms in as much detail as possible.
2. Verify the symptoms. Try to re-create the failure by running the diagnostic test or by repeating the operation.

Testing the computer

The ThinkPad computer has a test program called PC-Doctor for DOS (hereafter called *PC-Doctor*.) You can detect errors by running the diagnostics test included in PC-Doctor. This section is an overview of the procedure. For details that depend on model-unique functions, refer to "Product overview" on page 34.

For some possible configurations of the computer, PC-Doctor might not run correctly. To avoid this problem, you need to initialize the computer setup by use of the BIOS Setup Utility before you run PC-Doctor. On the BIOS Setup Utility screen, press F9, Enter, F10, and then Enter.

Note: When you initialize the computer configuration, some devices are disabled, such as the serial port. If you test one of these devices, you will need to enable it by using Configuration utility for DOS. The utility is available on the following Web site: `http://www.lenovo.com/support`

PC-Doctor cannot be used to test a device that is in the ThinkPad X6 Tablet UltraBase, even if the computer supports the ThinkPad X6 Tablet UltraBase. To test a USB device, connect it to the USB connector of the computer.

Creating the PC-Doctor diagnostics diskette

To create the PC-Doctor disk from the Rescue and Recovery workspace, do as follows:

1. Enter the Rescue and Recovery workspace by pressing the ThinkVantage button during POST.
2. When the Rescue and Recovery workspace finishes loading, click **Diagnostic Diskette**.
3. Authenticating the digital signature takes about 15 seconds; then the ThinkPad computer will reboot into PC-DOS.
4. A batch file automatically starts up to prompt you through the process of creating diskettes. You are notified of how many diskettes you will need.
   a. You are prompted to insert each diskette in sequence.
   b. Typically, all you need to do is to press the Enter key for the floppy drive; the system then formats and creates the diskette.
   c. Each diskette is erased and formatted with the PC-Doctor for DOS boot image.
5. Once all the diskettes have been created, the ThinkPad computer will reboot. The user is asked to remove all diskettes from the drive, or to insert the first diskette created if it is desired to run the diagnostics.

Downloaded from www.Manualslib.com manuals search engine

To run the test, do as follows:

Note: In the following procedure, you can select an item not only with the arrow keys, but also with the TrackPoint pointer. Instead of pressing Enter, click the left button.

1. Insert the PC-Doctor disk into the diskette drive; then power on the computer.

   If the computer cannot be powered on, go to "Power system checkout" on page 30, and check the power sources.

   If an error code appears, go to "Symptom-to-FRU index" on page 42.

   On the first screen, select the model and press Enter. Follow the instructions on the screen.
2. The main panel of PC-Doctor appears.
3. Select **Diagnostics** with the arrow keys, and press Enter.

   A pull-down menu appears. (Its exact form depends on the model.)

   Note: PC-Doctor menu does not mean the formal support device list. Some unsupported device names may appear in the PC-Doctor menu.

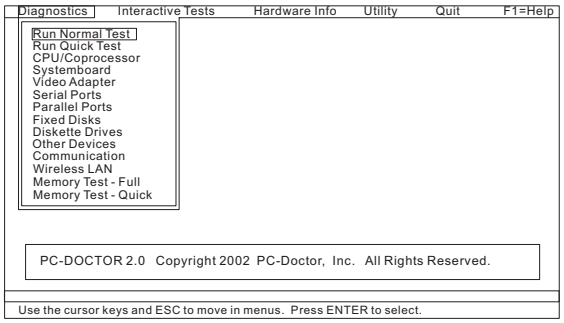

Downloaded from www.Manualslib.com manuals search engine

The options on the test menu are as follows:

Diagnostics	Interactive Tests
• Run Normal Test • Run Quick Test • CPU/Coprocessor • Systemboard • Video Adapter • Serial Ports • Parallel Ports • Fixed Disks • Diskette Drives • Other Devices • ThinkPad Devices • Communication • Wireless LAN • Memory Test – Full • Memory Test – Quick	• Keyboard • Video • Internal Speaker • Mouse • Diskette • System Load • CD-ROM/DVD Test • Intel Wireless Radio
Notes: • In the **Keyboard** test in **Interactive Tests**, the Fn key should be held down for at least 2 seconds; otherwise, it cannot be sensed. • **Video Adapter** test supports only the LCD display on the ThinkPad computer. If you have an external monitor attached to your computer, detach it before running PC-Doctor for DOS. • To test **Digital Signature Chip**, the security chip must be set to Active. • To test **Serial Ports** or **Parallel Ports**, the ThinkPad computer must be attached to the ThinkPad X6 Tablet UltraBase.	

4. Run the applicable function test.
5. Follow the instructions on the screen. If there is a problem, PC-Doctor shows messages describing it.
6. To exit the test, select **Quit — Exit Diag**.

   To cancel the test, press Esc.

Note: After running PC-Doctor, check the time and date on the system and reset them if they are incorrect.

Detecting system information with PC-Doctor

PC-Doctor can detect the following system information:

Hardware Info

- System Configuration
- Memory Contents
- Physical Disk Drives
- Logical Disk Drives
- VGA Information
- IDE Drive Info
- PCI Information
- PNPISA Info
- SMBIOS Info
- VESA LCD Info
- Hardware Events Log

Downloaded from www.Manualslib.com manuals search engine

Utility

- Run External Tests
- Surface Scan Hard Disk
- Benchmark System
- DOS Shell
- Tech Support Form
- Battery Rundown
- View Test Log
- Print Log
- Save Log
- Full Erase Hard Drive
- Quick Erase Hard Drive

PC-Doctor for Windows

This product is designed to help you troubleshoot and resolve problems related to your computer. Select one of the categories listed below to display symptoms and solutions:

- CHECK SYSTEM HEALTH
- SYSTEM AND DEVICE TESTS
- LENOVO TROUBLESHOOTING
- CENTER
- SYSTEM REPORTS
- UPDATES AND SUPPORT

Power system checkout

To verify a symptom, do the following:

1. Turn off the computer.
2. Remove the battery pack.
3. Connect the ac adapter.
4. Check that power is supplied when you turn on the computer.
5. Turn off the computer.
6. Disconnect the ac adapter and install the charged battery pack.
7. Check that the battery pack supplies power when you turn on the computer.

If you suspect a power problem, see the appropriate one of the following power supply checkouts:

- “Checking the ac adapter”
- “Checking operational charging” on page 31
- “Checking the battery pack” on page 31
- “Checking the backup battery” on page 32

Checking the ac adapter

You are here because the computer fails only when the ac adapter is used.

- If the power problem occurs only when the ThinkPad X6 Tablet UltraBase is used, replace the UltraBase.
- If the power-on indicator does not turn on, check the power cord of the ac adapter for correct continuity and installation.
- If the computer does not charge during operation, go to ″Checking operational charging.″

To check the ac adapter, do the following:

1. Unplug the ac adapter cable from the computer.
2. Measure the output voltage at the plug of the ac adapter cable. See the following figure:

Downloaded from www.Manualslib.com manuals search engine

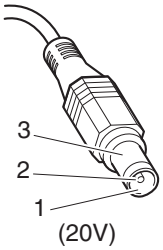

Pin	Voltage (V dc)
1	+20
2	0
3	Ground

Note: Output voltage of pin no.2 of the ac adapter may different from the one you are servicing.

3. If the voltage is not correct, replace the ac adapter.
4. If the voltage is acceptable, do the following:
   - Replace the system board.
   - If the problem persists, go to "Product overview" on page 34.

Note: Noise from the ac adapter does not always indicate a defect.

Checking operational charging

To check whether the battery charges properly during operation, use a discharged battery pack or a battery pack that has less than 50% of the total power remaining when installed in the computer.

Perform operational charging. If the battery status indicator or icon does not turn on, remove the battery pack and let it return to room temperature. Reinstall the battery pack. If the charge indicator or icon still does not turn on, replace the battery pack.

If the charge indicator still does not turn on, replace the system board. Then reinstall the battery pack. If it is still not charged, go to the next section.

Checking the battery pack

Battery charging does not start until the Power Meter shows that less than 95% of the total power remains; under this condition the battery pack can charge to 100% of its capacity. This protects the battery pack from being overcharged or from having a shortened life.

To check your battery, move your cursor to the Power Meter icon in the icon tray of the Windows taskbar and wait for a moment (but do not click), and the percentage of battery power remaining is displayed. To get detailed information about the battery, double-click the Power Meter icon.

Note: If the battery pack becomes hot, it may not be able to charge. Remove it from the computer and leave it at room temperature for a while. After it cools down, reinstall and recharge it.

To check the battery pack, do the following:

1. Power off the computer.
2. Remove the battery pack and measure the voltage between battery terminals 1 (+) and 7 (–). See the following figure:

Downloaded from www.Manualslib.com manuals search engine

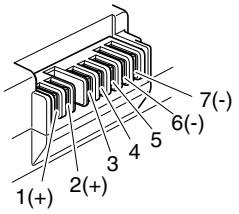

Terminal	Voltage (V dc)
1	+ 0 to + 12.6
7	Ground (–)

3. If the voltage is less than +11.0 V dc, the battery pack has been discharged.

   Note: Recharging will take at least 3 hours, even if the indicator does not turn on.

   If the voltage is still less than +11.0 V dc after recharging, replace the battery.
4. If the voltage is more than +11.0 V dc, measure the resistance between battery terminals 5 and 7. The resistance must be 4 to 30 K Ω.

   If the resistance is not correct, replace the battery pack. If the resistance is correct, replace the system board.

Checking the backup battery

Do the following:

1. Power off the computer, and unplug the ac adapter from it.
2. Turn the computer upside down.
3. Remove the battery pack (see “1010 Battery pack” on page 54).
4. Remove the backup battery (see “1060 Backup battery” on page 64).
5. Measure the voltage of the backup battery. See the following figure.

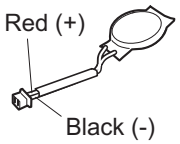

Wire	Voltage (V dc)
Red	+2.5 to +3.2
Black	Ground

- If the voltage is correct, replace the system board.
- If the voltage is not correct, replace the backup battery.
- If the backup battery discharges quickly after replacement, replace the system board.

Downloaded from www.Manualslib.com manuals search engine

ThinkPad X60 Tablet

Product overview 34
Specifications 34
Status indicators 36
FRU tests 38
Fn key combinations 40
Symptom-to-FRU index 42
Numeric error codes 42
Error messages 46
Beep symptoms 47
No-beep symptoms 47
LCD-related symptoms 48
Intermittent problems 49
Undetermined problems 49
FRU replacement notices 50
Screw notices 50
Retaining serial numbers 50
Restoring the serial number of the system unit 51
Retaining the UUID 51
Reading or writing the ECA information . . 51
Removing and replacing a FRU. 53
1010 Battery pack 54
1020 Hard disk drive slot cover, hard disk drive rubber rails, and hard disk drive 55
1030 DIMM slot cover and DIMM 57
1040 Hinge caps 59
1050 Keyboard 61
1060 Backup battery 64
1070 LCD extend board 65
1080 Keyboard bezel 66
1090 Modem daughter card (MDC-1.5) 67
1100 PCI Express Mini Card for wireless LAN . . 69
1110 PCI Express Mini Card for wireless WAN . 70
1120 ***Bluetooth*** daughter card (BDC-2) 71
1130 DC-in connector and modem cable 72
1140 Speaker assembly 73
1150 LCD assembly 74
1160 Pen switch assembly, ***Bluetooth*** cable, and base cover 77
1170 HDD connector sub card 80
1180 Fan assembly 81
1190 System board, PC Card/ExpressCard slots assembly 82
2010 LCD front bezel 85
2020 Center latch 86
2030 Fingerprint reader 87
2040 Inverter card 88
2050 Micro processor board 89
2060 Hinge and microphone cable 90
2070 Micro processor board/inverter card FFC (flexible flat cable), LCD panel with digitizer, and LCD cable 92
2080 Wireless antenna cables and LCD rear cover 94
Locations 96
Front view. 96
Rear view 97
Rear view (tablet mode) 97
Bottom view 98
Rear view (ThinkPad X6 Tablet UltraBase) . . . 99
Bottom view (ThinkPad X6 Tablet UltraBase) . . 99
Parts list 100
Overall 100
LCD FRUs 110
12.1-in. XGA TFT with digitizer 111
12.1-in. SXGA+ TFT with digitizer 113
12.1-in. XGA+ TFT, touch panel with digitizer 115
Keyboard 117
Recovery discs 118
Windows XP Tablet Edition CDs 118
Windows Vista Business (32 bit) DVDs . . . 119
Miscellaneous parts 120
AC adapters 121
Optional FRUs 121
Common parts list. 122
Tools 122
Power cords 123
Notices 124
Trademarks 125

© Copyright Lenovo 2006, 2007

Downloaded from www.Manualslib.com manuals search engine

Product overview

This section presents the following product-unique information:
- "Specifications"
- "Status indicators" on page 36
- "FRU tests" on page 38
- "Fn key combinations" on page 40

Specifications

The following table lists the specifications of the ThinkPad X60 Tablet:

Feature	Description
Processor	• Intel® Core™ Solo processor T1400 (1.2 GHz), 2-MB L2 cache • Intel Core Duo processor T2400 (1.67 GHz), 2-MB L2 cache • Intel Core Duo processor T2500 (1.83 GHz), 2-MB L2 cache
Bus architecture	• 533-MHz or 667-MHz PSB • 667-MHz DDR2 SDRAM (PC2-5300) • PCI bus • PCI Express bus • DMI
Graphic memory chip	• Maximum 128-MB shared with system memory (Intel Graphics Media Accelerator 950)
CMOS RAM	• 242 bytes
Display	• 12.1-inch, 16M colors, XGA (1024 × 768 resolution) TFT color LCD • 12.1-inch, 16M colors, SXGA+ (1400 × 1050 resolution) TFT color LCD
Standard memory	• 256-MB DDR2-667 SDRAM SO-DIMM (PC2-5300) card × 1 • 512-MB DDR2-667 SDRAM SO-DIMM (PC2-5300) card × 1 • 1-GB DDR2-667 SDRAM SO-DIMM (PC2-5300) card × 1
Optional memory	• 256-MB DDR2-667 SDRAM SO-DIMM (PC2-5300) card × 1 • 512-MB DDR2-667 SDRAM SO-DIMM (PC2-5300) card × 1 • 1-GB DDR2-667 SDRAM SO-DIMM (PC2-5300) card × 1 • 2-GB DDR2-667 SDRAM SO-DIMM (PC2-5300) card × 1 (maximum of 4.0 GB) **Note:** Due to the limitation of the current 32-bit PC architecture, actual usable memory size is limited to 3 GB even though the physical installable memory size is 4 GB in ThinkPad X60 Tablet computers.
Ethernet (on the system board)	• Gigabit Ethernet
Internal modem	• 56.6 Kbps
Audio	• Built-in monaural speaker • Software control volume
Infrared transfer	• IrDA 1.1

(continued)

Downloaded from www.Manualslib.com manuals search engine

Feature	Description
Hard disk drive	• 40 GB, 5400 rpm, 9.5 mm high, Serial ATA (SATA) interface • 60 GB, 5400 rpm, 9.5 mm high, SATA interface • 80 GB, 5400 rpm, 9.5 mm high, SATA interface • 100 GB, 5400 rpm, 9.5 mm high, SATA interface • 120 GB, 5400 rpm, 9.5 mm high, SATA interface • 60 GB, 7200 rpm, 9.5 mm high, SATA interface • 100 GB, 7200 rpm, 9.5 mm high, SATA interface Supported hard disk drives are depend on the model.
Ultrabay Slim device	Supported in ThinkPad X6 Tablet UltraBase
Fingerprint reader	Some models
I/O port	• External monitor connector • RJ11 connector • RJ45 connector • Stereo headphone jack • Monaural microphone jack • Infrared port • Docking connector • Universal serial bus (USB) connector × 3 (compatible with USB 1.1 and 2.0) • IEEE 1394 connector • DC-in connector
PCI Express Mini Card	• ThinkPad 11a/b/g Wireless LAN Mini PCI Express Adapter • Intel PRO Wireless 3945ABG Mini-PCI Express Adapter • ThinkPad 11a/b/g/n Wireless LAN Mini-PCI Express Adapter • Sierra Wireless EV-DO Wireless WAN Mini PCI Express Adapter • Sierra Wireless MC8755 PCI Express MiniCard • Integrated Cingular HSDPA 3G Wireless Broadband Network Adapter
PC Card /ExpressCard slots	• ExpressCard (34 module, 54 module) for upper slot • PC Card (Type-II) for lower slot
Bluetooth wireless (some models)	• ThinkPad *Bluetooth* with Enhanced Data Rate (BDC-2)
Modem	• ThinkPad Modem (MDC-1.5, 56 kbps HDA)
Battery	• Li-ion battery (4 cells) 2.0 Ah • Li-ion battery (8 cells) 4.55 Ah • Ultrabay Slim Li Polymer battery (4 cells) (option)
AC adapter	• 65-watt type
Preinstalled operating system	• Windows XP Tablet Edition • Windows Vista™ Business (32 bit)

Downloaded from www.Manualslib.com manuals search engine

Status indicators

The system status indicators show the status of the computer, as follows:

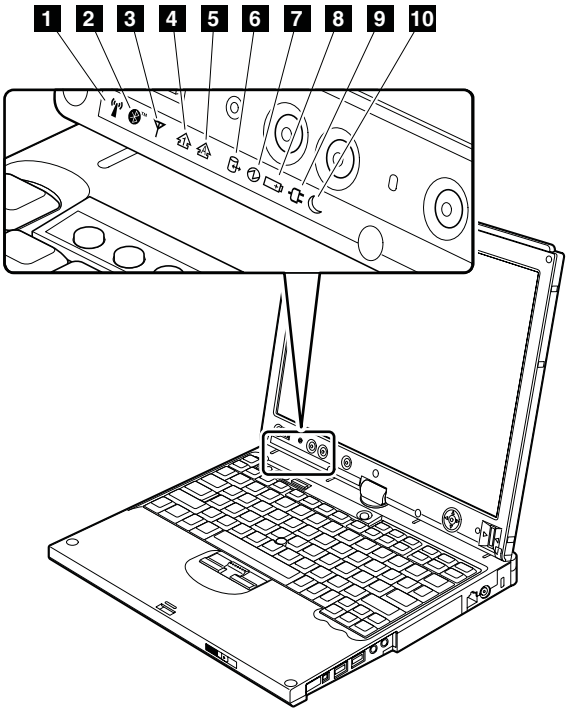

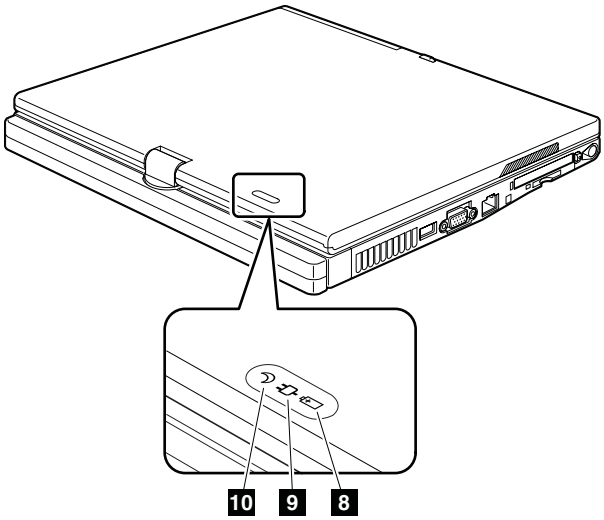

Indicator	Meaning
1 Wireless status	**Green:** The wireless feature (the IEEE 802.11 standard or IEEE 802.11n) is on, and the radio link is ready for use. **Blinking green:** Data is being transmitted.

(continued)

Downloaded from www.Manualslib.com manuals search engine

Indicator		Meaning
2	*Bluetooth* status	**Green:** *Bluetooth* wireless is operational. This indicator is on when *Bluetooth* wireless is on and not in suspend mode.
3	Wireless WAN status	**Green:** The wireless WAN is on, and the radio link is ready for use. **Blinking green:** Data is being transmitted.
4	Num lock	**Green:** The numeric keypad on the keyboard is enabled. To enable or disable the keypad, press and hold the Shift key, and press the NumLk (ScrLk) key.
5	Caps lock	**Green:** Caps Lock mode is enabled. To enable or disable Caps Lock mode, press the Caps Lock key.
6	Drive in use	**Green:** Data is being read from or written to the hard disk drive, the diskette drive, or the drive in the Ultrabay Slim device. When this indicator is on, do not put the computer into standby mode or turn off the computer. **Note:** Do not move the system while the green drive-in-use light is on. Sudden physical shock could cause drive errors.
7	Power on	**Green:** The computer is on and ready to use. This indicator stays lit whenever the computer is on and is not in standby mode.
8	Battery status	**Green:** The battery is charged between 80% to 100% of the capacity, and being discharged between 0% to 80% of the capacity. **Blinking green:** The battery is charged between 20% to 80% of the capacity, and being charged. **Orange:** The battery is charged between 5% and 20% of the capacity, and being discharged. **Blinking orange (slow):** The battery is charged between 5% to 20% of the capacity, and being charged. **Blinking orange (rapid):** The battery is charged between 0% to 5% of the capacity.
9	AC power status	**Green:** The computer is connected to the ac power supply.
10	Standby status	**Green:** The computer is in standby mode. **Blinking green:** The computer is entering standby mode or hibernation mode, or is resuming normal operation.

Downloaded from www.Manualslib.com manuals search engine

FRU tests

The following table shows the test for each FRU.

FRU	Applicable test
System board	1. **Diagnostics** --> **CPU/Coprocessor** 2. **Diagnostics** --> **Systemboard** 3. If the ThinkPad X6 Tablet UltraBase is attached to the ThinkPad computer, detach it. Place the computer on a horizontal surface, and run **Diagnostics** --> **ThinkPad Devices** --> **HDD Active Protection Test**. **Note:** Do not apply any physical shock to the computer while the test is running.
Power	**Diagnostics** --> **ThinkPad Devices** --> **AC Adapter**, **Battery 1 (Battery 2)**
LCD unit	1. **Diagnostics** --> **Video Adapter** 2. **Interactive Tests** --> **Video**
Modem daughter card (MDC-1.5)	1. Make sure the modem is set up correctly. 2. Replace the modem jack and the modem card in turn, and run the following tests in **Diagnostics** --> **Communication**: a. Conexant Smart Modem Interrupt b. Conexant Smart Modem Dialtone
Audio	1. **Interactive Tests** --> **Internal Speaker** 2. Enter the BIOS Setup Utility and change Serial ATA (SATA) setting to **Compatibility**, and run **Diagnostics** --> **Other Devices** --> **Analog Devices HDA CODEC Test**
Speaker	**Interactive Tests** --> **Internal Speaker**
PC Card slot	**Diagnostics** --> **Systemboard** --> **PCMCIA**
ExpressCard slot	1. Insert a PCI-Express/USB Wrap card into the ExpressCard slot. 2. Turn on the computer. 3. Run **Diagnostics** --> **ThinkPad Devices** --> **ExpressCard slot**.
Keyboard	1. **Diagnostics** --> **Systemboard** --> **Keyboard** 2. **Interactive Tests** --> **Keyboard**
Hard disk drive	Enter the BIOS Setup Utility and change Serial ATA (SATA) setting to **Compatibility**, and run **Diagnostics** --> **Fixed Disks**
	You can also diagnose the hard disk drive without starting up the operating system. To diagnose the hard disk drive from the BIOS Setup Utility, do as follows: 1. Remove any diskette from the diskette drive, and then turn off the computer. 2. Turn on the computer. 3. While the message, “To interrupt normal startup, press the blue ThinkVangate button,” is displayed at the lower left of the screen, press F1 to enter the BIOS Setup Utility. 4. Using cursor keys, select **HDD diagnostic program**. Press enter. 5. Using cursor keys, select **Main hard disk drive** or **Ultrabay hard disk drive**. 6. Press Enter to start the diagnostic program.

(continued)

Downloaded from www.Manualslib.com manuals search engine

FRU	Applicable test
Diskette drive	1. **Diagnostics** --> **Diskette Drives** 2. **Interactive Tests** --> **Diskette**
DVD drive or DVD/CD-RW combo drive	1. **Diagnostics** --> **Other Devices** --> **CD-ROM/DVD** 2. **Interactive Tests** --> **CD-ROM/DVD Test**
Memory	1. If two DIMMs are installed, remove one of them and run **Diagnostics** --> **Memory Test—Quick**. 2. If the problem does not recur, return the DIMM to its place, remove the other one, and run the test again. 3. If the test does not detect the error, run **Diagnostics** --> **Memory Test—Full**.
Fan	1. Turn on the computer and check the air turbulence at the louver near the PC Card slot. 2. Run **Diagnostics** --> **ThinkPad Devices** --> **Fan**.
TrackPoint or pointing device	If the TrackPoint does not work, check the configuration as specified in the BIOS Setup Utility. If the TrackPoint is disabled, select **Automatic** to enable it. After you use the TrackPoint, the pointer may drift on the screen for a short time. This drift can occur when a slight, steady pressure is applied to the TrackPoint pointer. This symptom is not a hardware problem. If the pointer stops after a short time, no service action is necessary. If enabling the TrackPoint does not correct the problem, continue with the following: • **Interactive Tests** --> **Mouse**
Digitizer	• **Diagnostics** --> **ThinkPad Devices** --> **Digitizer firmware, Digitizer Sampling**

Downloaded from www.Manualslib.com manuals search engine

Fn key combinations

The following table shows the function of each combination of Fn with a function key.

Key combination	Description
Fn+F1	Reserved.
Fn+F2	Reserved.
Fn+F3	Select a power scheme that has been created by Power Manager. When you press this combination, a panel for selecting a power scheme appears. **Notes:** 1. To use the Fn+F3 key combination, you must have the ThinkPad PM device driver installed on the computer. 2. If you have logged on with an administrator user ID, and you press Fn+F3, the panel for selecting a power scheme appears. If you have logged on with another user ID, and you press Fn+F3, the panel does not appear. 3. You cannot turn off the computer display by pressing Fn+F3.
Fn+F4	Put the computer in standby mode. To return to normal operation, press the Fn key only, without pressing a function key. **Notes:** 1. To use the Fn+F4 key combination, you must have the ThinkPad PM device driver installed on the computer. 2. This combination of keys also functions as a sleep button. If you want to use the combination to put the computer into hibernation mode or shut the computer down, change the settings in the Power Manager.
Fn+F5	Enable or disable the built-in wireless networking features and the *Bluetooth* features. If you press Fn+F5, a list of wireless features is displayed. You can quickly change the power state of each feature in the list. **Note:** If you want to use Fn+F5 to enable the feature specified in IEEE standard 802.11, the following device drivers must be installed on the computer beforehand: • ThinkPad Power Management driver • OnScreen Display Utility • Wireless device drivers
Fn+F6	Reserved.
Fn+F7	Apply a presentation scheme directly, with no need to start Presentation Director. To disable this function and use the Fn+F7 key combination for switching a display output location, start Presentation Director, and change the settings.

(continued)

Downloaded from www.Manualslib.com manuals search engine

Key combination	Description
Fn+F7	Switch a display output location • External monitor (CRT display) • Computer display and external monitor (LCD + CRT display) • Computer display (LCD) **Notes:** 1. This function is not supported if different desktop images are displayed on the computer display and the external monitor (the Extend desktop function). 2. This function does not work while a DVD movie or a video clip is playing. To enable this function, start Presentation Director, and change the Fn+F7 settings. **Note:** Multiple users can log on to a single operating system by using different user IDs. Each user needs to change the settings.
Fn+F8	Reserved.
Fn+F9	Open the ThinkPad EasyEject Utility screen. Buttons for the following choices are displayed: • **Eject ThinkPad PC from Dock**: This button is displayed only if the ThinkPad computer has been attached to a ThinkPad X6 Tablet UltraBase. The computer can be detached from the ThinkPad X6 Tablet UltraBase. • **Run EasyEject Actions**: This button is used to select, stop, or remove external devices connected to the ThinkPad computer. • **Configure EasyEject Actions**: Opens the ThinkPad EasyEject Utility main window. • **Fn+F9 Settings**: Configures the settings for the Fn+F9 function.
Fn+F10	Reserved.
Fn+F11	Reserved.
Fn+F12	Put the computer into hibernation mode. To return to normal operation, press the power button for less than four seconds. **Note:** To use Fn+F12 for hibernation, you must have the ThinkPad PM device driver installed on the computer.
Fn+Home	The computer display becomes brighter.
Fn+End	The computer display becomes dimmer.
Fn+Spacebar	Enable the FullScreen Magnifier function.
Fn+PrtSc	Has the same function as the SysRq key.
Fn+ScrLk	Enable or disable the numeric keypad.
Fn+Pause	Has the same function as the Break key.
Fn+cursor keys	These key combinations work with Windows Media Player. Fn+down arrow key works for the Play or Pause button, Fn+up arrow key for the Stop button, Fn+right arrow key for the Next Track button, and Fn+left arrow key for the Previous Track button.

Downloaded from www.Manualslib.com manuals search engine

Symptom-to-FRU index

The symptom-to-FRU index in this section lists symptoms and errors and their possible causes. The most likely cause is listed first, in boldface type.

Note: Do the FRU replacement or other actions in the sequence shown in the column headed "FRU or action, in sequence." If replacing a FRU does not solve the problem, put the original part back in the computer. Do not replace a nondefective FRU.

This index can also help you determine, during regular servicing, what FRUs are likely to need to be replaced next.

A numeric error is displayed for each error detected in POST or system operation. In the displays, **n** can be any number.

If no numeric code is displayed, check the narrative descriptions of symptoms. If the symptom is not described there, go to "Intermittent problems" on page 49.

Note

For a device not supported by diagnostic codes in the ThinkPad notebook computers, see the manual for that device.

Numeric error codes

Symptom or error	FRU or action, in sequence
0175 Bad CRC1, stop POST task—The EEPROM checksum is not correct.	**System board.**
0176 System Security—The system has been tampered with.	1. **Run BIOS Setup Utility, and save the current setting by pressing F10.** 2. System board.
0177 Bad SVP data, stop POST task—The checksum of the supervisor password in the EEPROM is not correct.	**System board.**
0182 Bad CRC2. Enter BIOS Setup and load Setup defaults.—The checksum of the CRS2 setting in the EEPROM is not correct.	1. **Run BIOS Setup Utility. Press F9, and Enter to load the default setting. Then save the current setting by pressing F10.** 2. System board.
0185 Bad startup sequence settings. Enter BIOS Setup and load Setup defaults.	1. **Run BIOS Setup Utility. Press F9, and Enter to load the default setting. Then save the current setting by pressing F10.**
0187 EAIA data access error—The access to EEPROM is failed.	**System board.**
0188 Invalid RFID Serialization Information Area.	**System board.**
0189 Invalid RFID configuration information area—The EEPROM checksum is not correct.	**System board.**

Downloaded from www.Manualslib.com manuals search engine

Symptom or error	FRU or action, in sequence
0190 Critical low-battery error	1. **Charge the battery pack.** 2. Battery pack.
0191 System Security—Invalid Remote Change requested.	1. **Run BIOS Setup Utility, and then save current setting by pressing F10.** 2. System board.
0192 System Security— Embedded Security hardware tamper detected.	**System board.**
0199 System Security— Security password retry count exceeded.	1. **Run BIOS Setup Utility, and then save the current setting by pressing F10.** 2. System board.
01C8 Two or more modem devices are found. Remove all but one of them. Press <Esc> to continue.	1. **Remove either a Mini-PCI Card or a modem daughter card. Otherwise, press Esc to ignore the warning message.** 2. System board.
01C9 More than one Ethernet devices are found. Remove one of them. Press <Esc> to continue.	1. **Remove the Ethernet device that you installed; or press Esc to ignore the warning message.** 2. System board.
01CA More than one Wireless LAN devices are found. Remove one of them.	1. **Remove the wireless LAN device that you installed**. 2. System board.
0200 Hard disk error—The hard disk is not working.	1. **Reseat the hard disk drive.** 2. Load Setup Defaults in BIOS Setup Utility. 3. Hard disk drive. 4. System board.
021x Keyboard error.	**Run interactive tests of the keyboard and the auxiliary input device.**
0220 Monitor type error—Monitor type does not match the one specified in CMOS.	**Load Setup Defaults in BIOS Setup Utility.**
0230 Shadow RAM error—Shadow RAM fails at offset nnnn.	**System board.**
0231 System RAM error—System RAM fails at offset nnnn.	1. **DIMM.** 2. System board.
0232 Extended RAM error— Extended RAM fails at offset nnnn.	1. **DIMM.** 2. System board.
0250 System battery error—System battery is dead.	1. **Charge the backup battery for more than 8 hours by connecting the ac adapter.** 2. Replace the backup battery and run BIOS Setup Utility to reset the time and date.
0251 System CMOS checksum bad— Default configuration used.	1. **Charge the backup battery for more than 8 hours by connecting the ac adapter.** 2. Replace the backup battery and run BIOS Setup Utility to reset the time and date.

Downloaded from www.Manualslib.com manuals search engine

Symptom or error	FRU or action, in sequence
0252 Password checksum bad—The password is cleared.	**Reset the password by running BIOS Setup Utility.**
0260 System timer error.	1. **Charge the backup battery for more than 8 hours by connecting the ac adapter.** 2. Replace the backup battery and run BIOS Setup Utility to reset the time and date. 3. System board.
0270 Real-time clock error.	1. **Charge the backup battery for more than 8 hours by connecting the ac adapter.** 2. Replace the backup battery and run BIOS Setup Utility to reset the time and date. 3. System board.
0271 Date and time error—Neither the date nor the time is set in the computer.	**Run BIOS Setup Utility to reset the time and date.**
0280 Previous boot incomplete— Default configuration used.	1. **Load "Setup Default" in BIOS Setup Utility.** 2. DIMM. 3. System board.
02F0 CPU ID:xx Failed.	1. **CPU.** 2. System board.
02F4 EISA CMOS not writable.	1. **Load Setup Defaults in BIOS Setup Utility.** 2. Replace the backup battery. 3. System board.
02F5 DMA test failed.	1. **DIMM.** 2. System board.
02F6 Software NMI failed	1. **DIMM.** 2. System board.
02F7 Fail-safe timer NMI failed	1. **DIMM.** 2. System board.
1802 Unauthorized network card is plugged in—Turn off and remove the miniPCI network card.	1. **Remove Mini PCI network card.** 2. System board.
1803 Unauthorized daughter card is plugged in—Turn off and remove the daughter card.	1. **Remove the daughter card that you installed.** 2. System board.
1804 Unauthorized WAN card is plugged in—Power off and remove the WAN card.	1. **Remove the WAN card that you installed.** 2. System board.
1820 More than one external fingerprint reader is attached. Power off and remove all but the reader that you set up within your main operating system.	**Remove all but the reader that you set up for the authentication.**

Downloaded from www.Manualslib.com manuals search engine

Symptom or error	FRU or action, in sequence
2000 Hard Drive Active Protection sensor diagnostics failed. Press <Esc> to continue. Press <F1> to enter SETUP	1. Undock docking station or port replicator if it is attached to the ThinkPad computer, and place the computer on a horizontal surface. Do not apply any physical shock to the computer. 2. Run **Diagnostics** --> **ThinkPad Devices** --> **HDD Active Protection Test**.
2010 Warning: Your internal hard disk drive (HDD) may not function correctly on this system. Ensure that your HDD is supported on this system and that the latest HDD firmware is installed.	Inform the following information to the customer: If in the primary bay the customer is using a non-IBM or non-Lenovo hard disk drive (HDD), or an old generation IBM HDD which is not supported by this system, with the risk in mind, the customer can still use it by pressing ESC. If in the primary drive bay the customer is using a supported IBM/Lenovo HDD with an old firmware, the customer needs to update its firmware to the latest. The latest version is available at `http://www.lenovo.com/support`
2100 Initialization error on HDD0 (Main hard disk drive)	1. **Reseat the hard disk drive.** 2. Main hard disk drive. 3. System board.
2102 Initialization error on HDD1 (Ultrabay hard disk drive)	1. **Reseat the hard disk drive.** 2. Ultrabay hard disk drive. 3. System board.
2110 Read error on HDD0 (Main hard disk drive)	1. **Reseat the hard disk drive.** 2. Main hard disk drive. 3. System board.
2112 Read error on HDD1 (Ultrabay hard disk drive)	1. **Reseat the hard disk drive.** 2. Ultrabay hard disk drive. 3. System board.

Downloaded from www.Manualslib.com manuals search engine

Error messages

Symptom or error	FRU or action, in sequence
Device address conflict.	1. **Load "Setup Defaults" in the BIOS Setup Utility**. 2. Backup battery. 3. System board.
Allocation error for device.	1. **Load "Setup Defaults" in the BIOS Setup Utility**. 2. Backup battery. 3. System board.
Failing bits: nnnn.	1. **DIMM**. 2. System board.
Invalid system configuration data.	1. **DIMM**. 2. System board.
I/O device IRQ conflict.	1. **Load "Setup Defaults" in the BIOS Setup Utility**. 2. Backup battery. 3. System board.
Hibernation error.	1. **Restore the system configuration to what it was before the computer entered hibernation mode**. 2. If memory size has been changed, re-create the hibernation file.
Fan error.	1. **Fan**. 2. Thermal grease. 3. System board.
Thermal sensing error.	**System board**.
Authentication of system services failed. Press <Esc> to resume.	**The Predesktop Area in the HDD is corrupted. Restore it from a recovery disc.**
Cannot boot from any device.	**Check the status of device which you want to boot from.** Device not found. 1. The device you want to boot from. 2. System board. Device Error. 1. The device you want to boot from. 2. System board. No valid operating system. 1. Check that the operating system has no failure and is installed correctly. 2. Reinstall the operation system. Excluded from boot order. • Enter the BIOS Setup Utility and add the device in boot order.

Downloaded from www.Manualslib.com manuals search engine

Beep symptoms

Symptom or error	FRU or action, in sequence
One beep and a blank, unreadable, or flashing LCD.	1. **Reseat the LCD connector**. 2. LCD assembly. 3. External CRT. 4. System board.
One long and two short beeps, and a blank or unreadable LCD.	1. **System board**. 2. LCD assembly. 3. DIMM.
Two short beeps with error codes.	**POST error. See "Numeric error codes" on page 42.**
Two short beeps and a blank screen.	1. **System board**. 2. DIMM.
Three short beeps, pause, three more short beeps, and one short beep.	1. **DIMM**. 2. System board
One short beep, pause, three short beeps, pause, three more short beeps, and one short beep.	
Only the cursor appears.	**Reinstall the operating system**.
Four cycles of four short beeps and a blank screen.	**System board** (security chip)
Five short beeps and a blank screen.	**System board**

No-beep symptoms

Symptom or error	FRU or action, in sequence
No beep, power-on indicator on, LCD blank, and no POST.	1. **Make sure that every connector is connected tightly and correctly**. 2. DIMM. 3. System board.
No beep, power-on indicator on, and LCD blank during POST.	1. **Reseat DIMM**. 2. System board.
The power-on password prompt appears.	A power-on password or a supervisor password is set. Type the password and press **Enter**.
The hard-disk password prompt appears.	A hard-disk password is set. Type the password and press **Enter**.

Downloaded from www.Manualslib.com manuals search engine

LCD-related symptoms

Important

The TFT LCD for the notebook computer contains many thin-film transistors (TFTs). The presence of a small number of dots that are missing, discolored, or always lighted is characteristic of TFT LCD technology, but excessive pixel problems can cause viewing concerns. The LCD should be replaced if the number of missing, discolored, or lighted dots in any background is:

- **XGA:** 8 or more bright dots, 8 or more dark dots, or a total of 9 or more bright and dark dots.
- **SXGA+:** 11 or more bright dots, 13 or more dark dots, or a total of 16 or more bright and dark dots.

Note: A bright dot means a pixel is always on (white or color.) A dark dot means a pixel is always off (black color.)

Symptom or error	FRU or action, in sequence
No beep, power-on indicator on, and a blank LCD during POST.	**System board**.
• LCD backlight not working. • LCD too dark. • LCD brightness cannot be adjusted. • LCD contrast cannot be adjusted.	1. **Reseat the LCD connectors**. 2. LCD assembly. 3. System board.
• LCD screen unreadable. • Characters missing pixels. • Screen abnormal. • Wrong color displayed.	1. **See important note for "LCD-related symptoms."** 2. Reseat all LCD connectors. 3. LCD assembly. 4. System board.
Horizontal or vertical lines displayed on LCD.	**LCD assembly**.

Downloaded from www.Manualslib.com manuals search engine

Intermittent problems

Intermittent system hang problems can be due to a variety of causes that have nothing to do with a hardware defect, such as cosmic radiation, electrostatic discharge, or software errors. FRU replacement should be considered only when a problem recurs.

When analyzing an intermittent problem, do the following:
1. Run the diagnostic test for the system board in loop mode **at least 10 times**.
2. If no error is detected, do **not** replace any FRUs.
3. If any error is detected, replace the FRU shown by the FRU code. Rerun the test to verify that no more errors exist.

Undetermined problems

If the diagnostic tests did not identify the adapter or device that has failed, if wrong devices are installed, or if the system simply is not operating, follow these procedures to isolate the failing FRU (do not isolate FRUs that have no defects).

Verify that all attached devices are supported by the computer.

Verify that the power supply being used at the time of the failure is operating correctly. (See "Power system checkout" on page 30.)
1. Turn off the computer.
2. Visually check each FRU for damage. Replace any damaged FRU.
3. Remove or disconnect all of the following devices:
   a. Non-ThinkPad devices
   b. Devices attached to the port replicator
   c. Printer, mouse, and other external devices
   d. Battery pack
   e. Hard disk drive
   f. External diskette drive or optical drive
   g. DIMM
   h. Optical disk or diskette in the internal drive
   i. PC Cards
4. Turn on the computer.
5. Determine whether the problem has been solved.
6. If the problem does not recur, reconnect the removed devices one at a time until you find the failing FRU.
7. If the problem remains, replace the following FRUs one at a time (do not replace a nondefective FRU):
   a. System board
   b. LCD assembly

Downloaded from www.Manualslib.com manuals search engine

FRU replacement notices

This section contains notices related to removing and replacing parts. Read this section carefully before replacing any FRU.

Screw notices

Loose screws can cause a reliability problem. In the ThinkPad computer, this problem is addressed with special nylon-coated screws that have the following characteristics:
- They maintain tight connections.
- They do not easily come loose, even with shock or vibration.
- They are harder to tighten.
- Each one should be used only once.

Do the following when you service this machine:
- Keep the screw kit (for the P/N, see "Miscellaneous parts" on page 120) in your tool bag.
- Always use new screws.
- Use a torque screwdriver if you have one.

Tighten screws as follows:
- **Plastic to plastic**

  Turn an additional **90 degrees** after the screw head touches the surface of the plastic part:

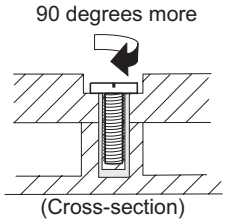

- **Logic card to plastic**

  Turn an additional **180 degrees** after the screw head touches the surface of the logic card:

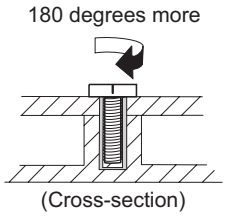

- **Torque driver**

  If you have a torque driver, refer to the "Torque" column for each step.
- Make sure that you use the correct screw. If you have a torque screwdriver, tighten all screws firmly to the torque shown in the table. **Never use a screw that you removed. Use a new one. Make sure that all of the screws are tightened firmly.**
- Ensure torque screw drivers are calibrated correctly following country specifications.

Retaining serial numbers

This section includes the following descriptions:
- "Restoring the serial number of the system unit" on page 51

Downloaded from www.Manualslib.com manuals search engine

- "Retaining the UUID"
- "Reading or writing the ECA information"

Restoring the serial number of the system unit

When the computer was manufactured, the EEPROM on the system board was loaded with the serial numbers of the system and all major components. These numbers need to remain the same throughout the life of the computer.

If you replace the system board, you must restore the serial number of the system unit to its original value.

Before replacing the system board, save the original serial number by doing the following:

1. Install the ThinkPad Hardware Maintenance Diskette Version 1.73 or later, and restart the computer.
2. From the main menu, select **1. Set System Identification**.
3. Select **2. Read S/N data from EEPROM**.

The serial number of each device in your computer is displayed; the serial number of the system unit is listed as follows:

- 20: Serial number

Write down that number.

Note: The serial number of the system unit is also written on the label attached to the bottom of the computer.

After you have replaced the system board, restore the serial number by doing the following:

1. Install the ThinkPad Hardware Maintenance Diskette Version 1.73 or later and restart the computer.
2. From the main menu, select **1. Set System Identification**.
3. Select **1. Add S/N data from EEPROM**.

   Follow the instructions on the screen.

Retaining the UUID

The Universally Unique Identifier (UUID) is a 128-bit number uniquely assigned to your computer at production and stored in the EEPROM of your system board. The algorithm that generates the number is designed to provide unique IDs until the year A.D. 3400. No two computers in the world have the same number.

When you replace the system board, you must set the UUID on the new system board as follows:

1. Install the ThinkPad Hardware Maintenance Diskette Version 1.73 or later, and restart the computer.
2. From the main menu, select **4. Assign UUID**.

   A new UUID is created and written. If a valid UUID already exists, it is not overwritten.

Reading or writing the ECA information

Information on Engineering Change Announcements (ECA) are stored in the EEPROM of the system board. The electronic storage of this information simplifies the procedure to check if the ECA has been previously applied to a machine. The machine does not need to be disassembled to check for the ECA application.

Downloaded from www.Manualslib.com manuals search engine

To check what ECAs have been previously applied to the machine, use the ECA Information Read/Write function on the ThinkPad Hardware Maintenance Diskette Version 1.73 or later.

1. Insert the ThinkPad Hardware Maintenance Diskette Version 1.73 or later, and restart the computer.
2. From the main menu, select **6. Set ECA Information**.
3. To read ECA information, select **2. Read ECA/rework number from EEPROM** and follow the instruction.
4. To read box build date, select **5. Read box build date from EEPROM**, and follow the instruction on the screen.

After an ECA has been applied to the machine, the EEPROM must be updated to reflect the ECA's application. Use the ThinkPad Hardware Maintenance Diskette Version 1.73 or later to update the EEPROM.

Note: Only the ECA number is stored in the EEPROM. The machine type of the ECA is assumed be the same as the machine type of the machine that had the ECA applied to it.

1. Insert the ThinkPad Hardware Maintenance Diskette Version 1.73 or later, and restart the computer.
2. From the main menu, select **6. Set ECA Information**.
3. To write ECA information, select **1. Write ECA/rework number from EEPROM**, and follow the instruction.
4. To write box build date, select **4. Write box build date from EEPROM**, and follow the instruction on the screen.

If the system board is being replaced, try to read the ECA information from the old system board and transfer the information to the new system. If the system board is inoperable, this will not be possible.

Downloaded from www.Manualslib.com manuals search engine

Removing and replacing a FRU

This section presents directions and drawings for use in removing and replacing a FRU. Be sure to observe the following general rules:

1. Do not try to service any computer unless you have been trained and certified. An untrained person runs the risk of damaging parts.
2. Before replacing any FRU, review "FRU replacement notices" on page 50.
3. Begin by removing any FRUs that have to be removed before the failing FRU. Any such FRUs are listed at the top of the page. Remove them in the order in which they are listed.
4. Follow the correct sequence in the steps for removing the FRU, as given in the drawings by the numbers in square callouts.
5. When turning a screw to replace a FRU, turn it in the direction as given by the arrow in the drawing.
6. When removing the FRU, move it in the direction as given by the arrow in the drawing.
7. To put the new FRU in place, reverse the removal procedure and follow any notes that pertain to replacement. For information about connecting and arranging internal cables, see "Locations" on page 96.
8. When replacing a FRU, use the correct screw as shown in the procedures.

⚠ DANGER

Before removing any FRU, turn off the computer, unplug all power cords from electrical outlets, remove the battery pack, and then disconnect any interconnecting cables.

Attention: After replacing a FRU, do not turn on the computer until you have made sure that all screws, springs, and other small parts are in place and none are loose inside the computer. Verify this by shaking the computer gently and listening for rattling sounds. Metallic parts or metal flakes can cause electrical short circuits.

Attention: The system board is sensitive to, and can be damaged by, electrostatic discharge. Before touching it, establish personal grounding by touching a ground point with one hand or by using an electrostatic discharge (ESD) strap (P/N 6405959).

Downloaded from www.Manualslib.com manuals search engine

1010 Battery pack

DANGER

Use only the battery specified in the parts list for your computer. Any other battery could ignite or explode.

Unlock the battery release lever **1**. Holding the battery release lever in the unlocked position **2**, remove the battery pack in the direction shown by arrow **3**.

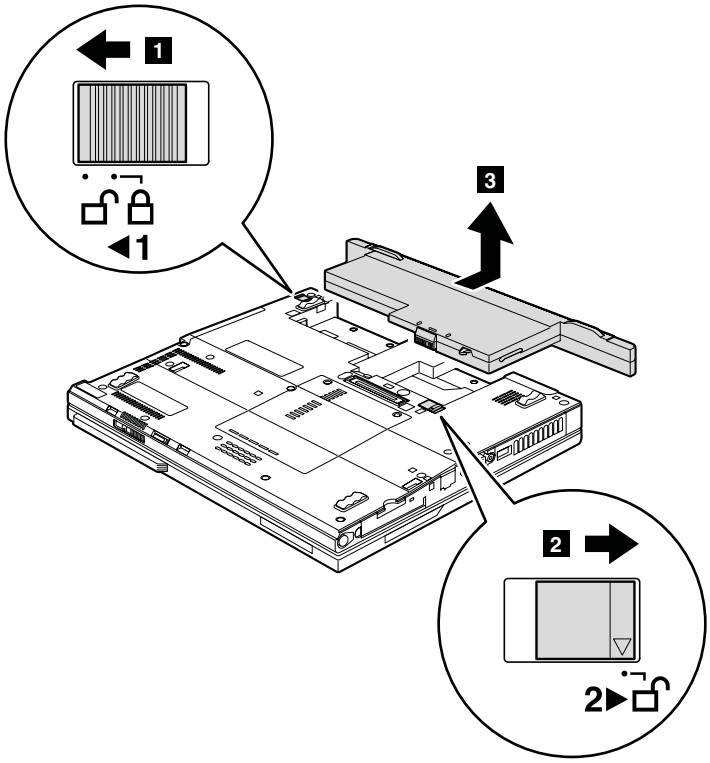

When installing: Install the battery pack along the slide rails of the slot. Then make sure that the battery release lever is in the locked position.

Downloaded from www.Manualslib.com manuals search engine

1020 Hard disk drive slot cover, hard disk drive rubber rails, and hard disk drive

For access, remove this FRU:
- "1010 Battery pack" on page 54

Attention

- **Do not drop the hard disk drive or apply any physical shock to it.** The hard disk drive is sensitive to physical shock. Improper handling can cause damage and permanent loss of data.
- Before removing the drive, have the user make a backup copy of all the information on it if possible.
- Never remove the drive while the system is operating or is in suspend mode.

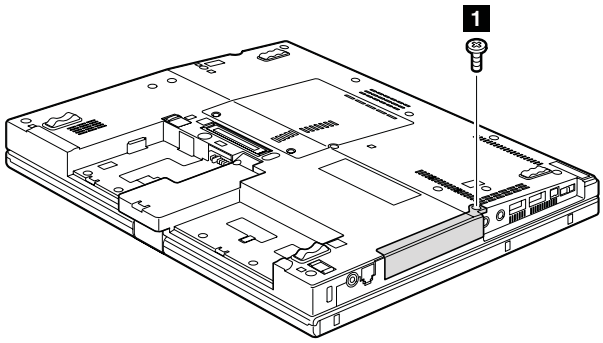

Step	Screw (quantity)	Color	Torque
1	Hard disk drive screw, nylon-coated (1)	Black	0.167 Nm (1.7 kgfcm)

(continued)

Downloaded from www.Manualslib.com manuals search engine

Remove the hard disk drive slot cover in step 2 and 3.

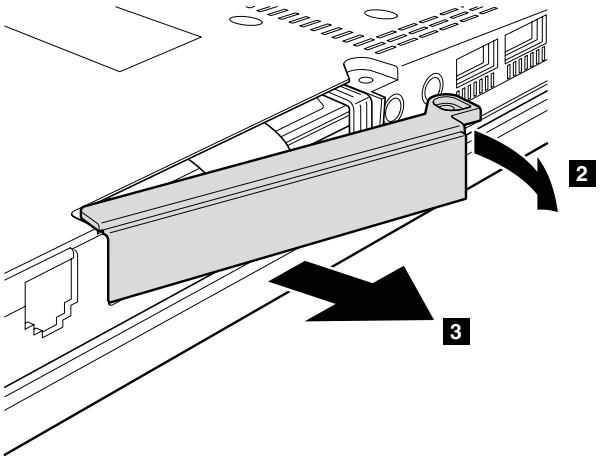

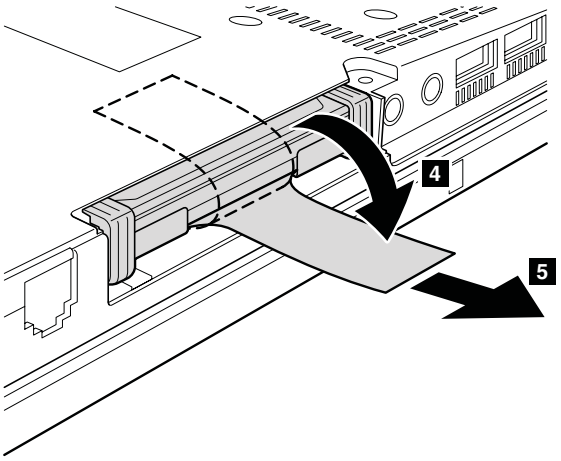

When installing: Make sure that the hard disk drive connector is attached firmly.

Remove the hard disk drive rubber rails in step 6.

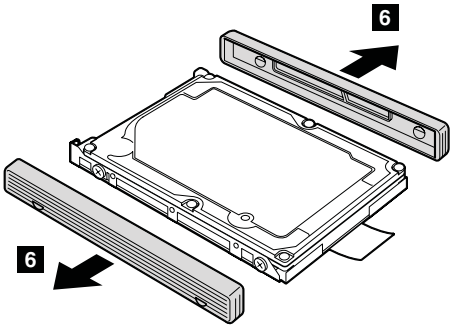

When installing: The rubber rails on the hard disk drive must be attached to the replacement drive. Otherwise the drive cannot be installed properly.

Downloaded from www.Manualslib.com manuals search engine

1030 DIMM slot cover and DIMM

For access, remove this FRU:
- "1010 Battery pack" on page 54

Remove the DIMM slot cover as shown in this figure.

Note: Loosen the screws 1, but do not remove them.

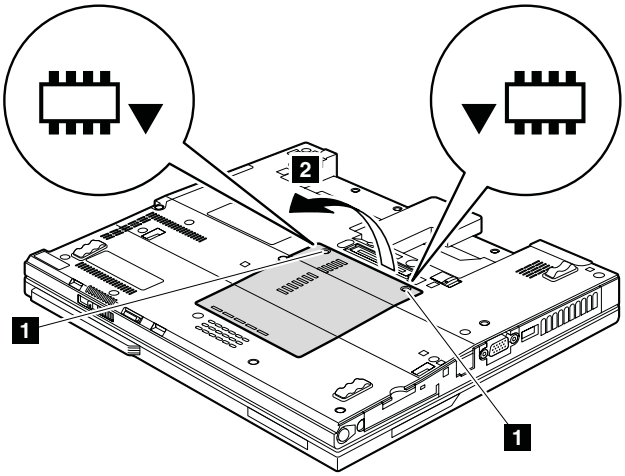

Remove the DIMM as shown in this figure.

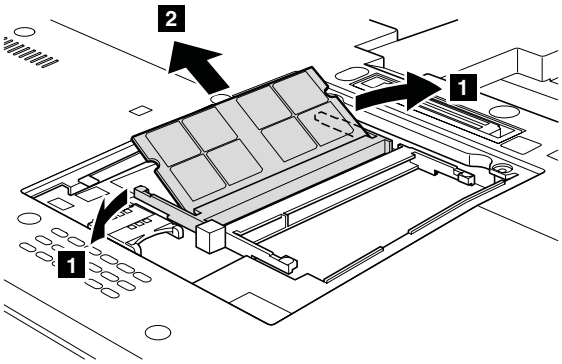

When installing: Insert the notched end of the DIMM into the socket. Press the DIMM firmly, and pivot it until it snaps into the place. Make sure that it is firmly fixed in the slot and does not move easily.

(continued)

Downloaded from www.Manualslib.com manuals search engine

If the SIM card has been inserted in its slot, remove it before you start the servicing.

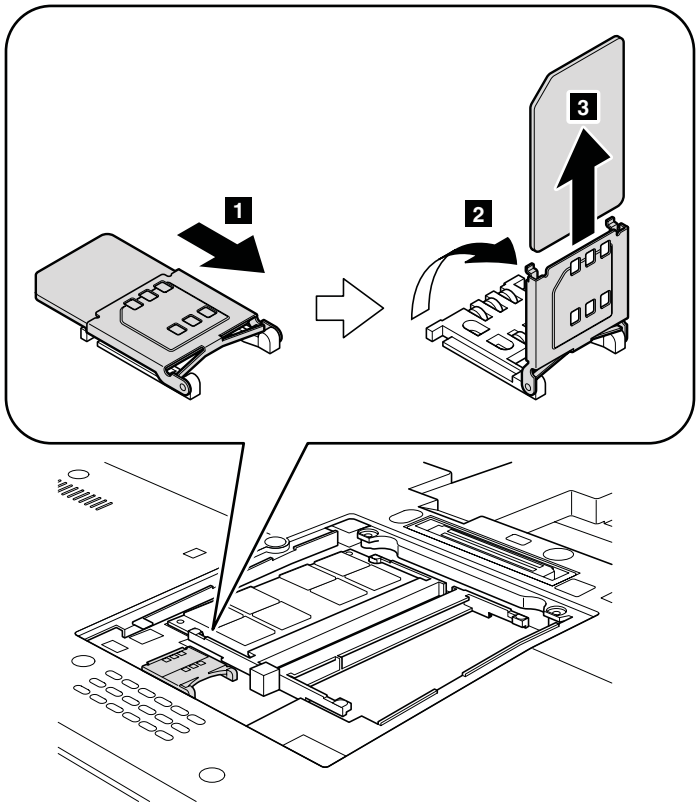

Downloaded from www.Manualslib.com manuals search engine

1040 Hinge caps

For access, remove this FRU:
- "1010 Battery pack" on page 54

Open the LCD cover and rotate the LCD unit as shown in this figure. Then close the LCD unit so that the digitizer faces upward.

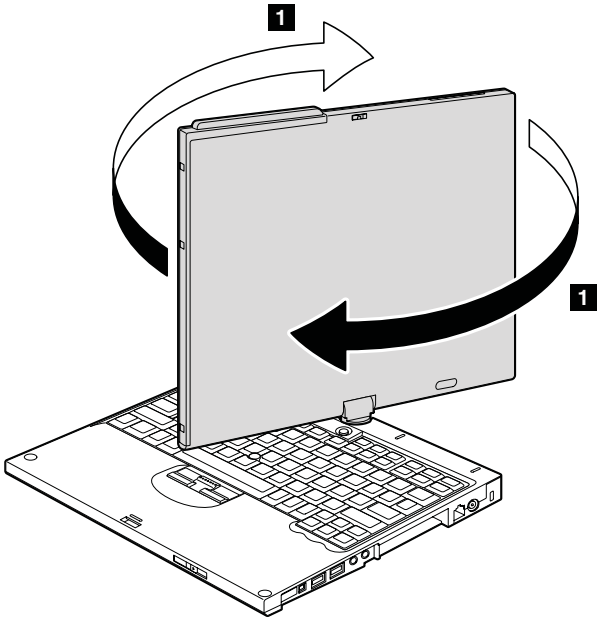

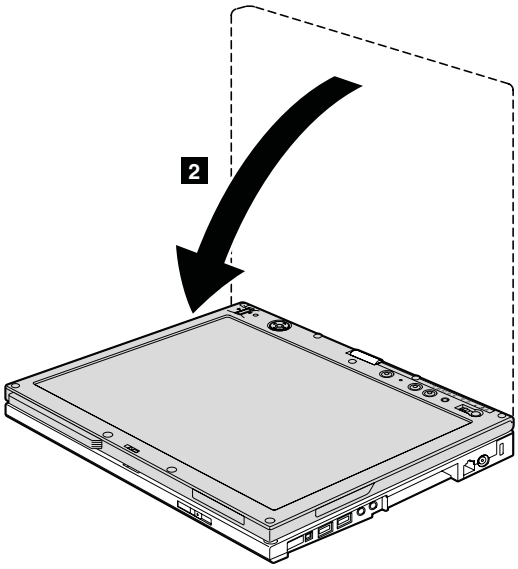

(continued)

Downloaded from www.Manualslib.com manuals search engine

First remove the hinge cap (large).

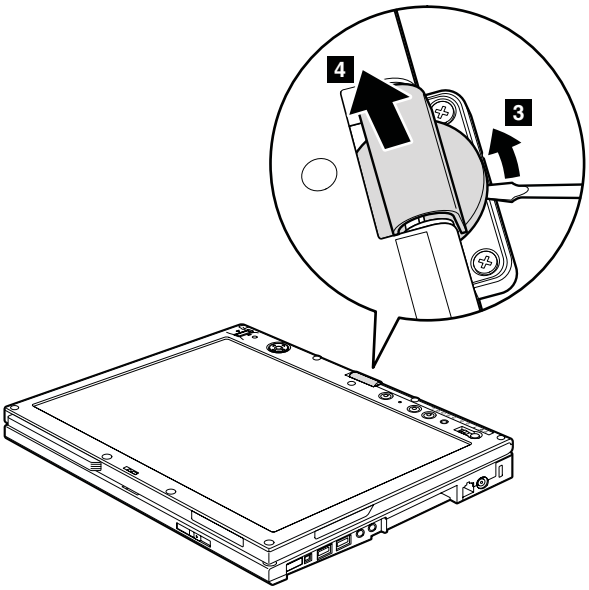

Before removing the hinge cap (small) in step **5**, rotate the LCD unit back to the original position, and close the LCD cover.

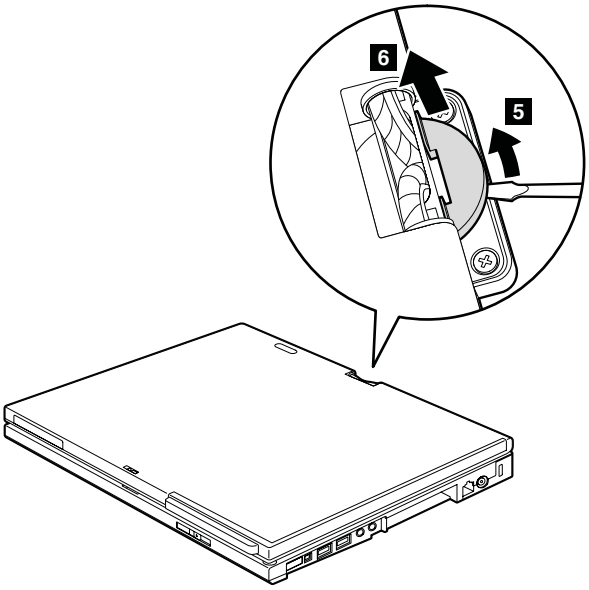

Downloaded from www.Manualslib.com manuals search engine

1050 Keyboard

For access, remove these FRUs in order:

- "1010 Battery pack" on page 54

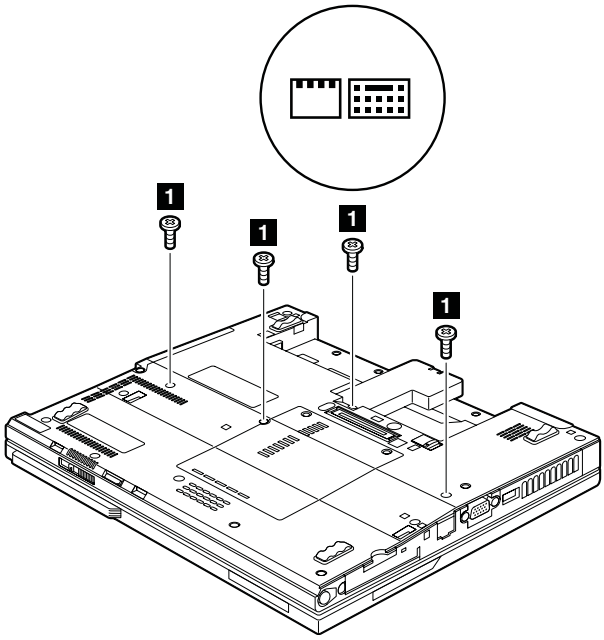

Step	Icon	Screw (quantity)	Color	Torque
1		M2 × 6 mm, wafer-head, nylon-coated (4)	Black	0.167 Nm (1.7 kgfcm)

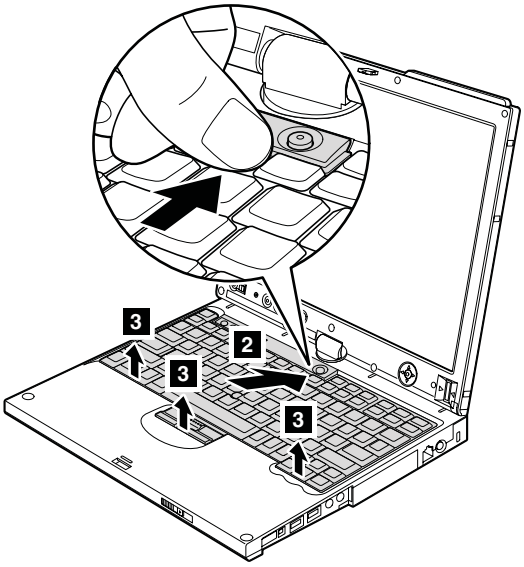

(continued)

Downloaded from www.Manualslib.com manuals search engine

Lift the keyboard a little in the direction shown by arrow **4**, and then detach the connector **5**.

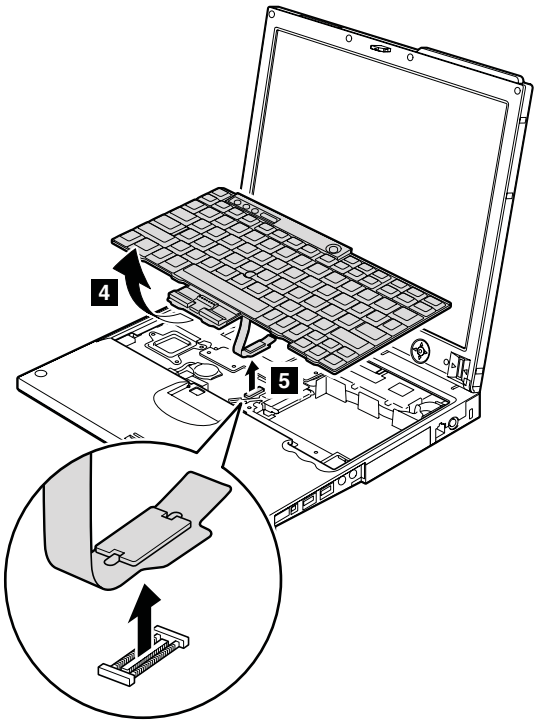

Downloaded from www.Manualslib.com manuals search engine

When installing:

1. Attach the keyboard connector firmly.
2. Make sure that the keyboard edges are under the frame as shown in this figure. Then press the keys to latch the keyboard firmly in place.

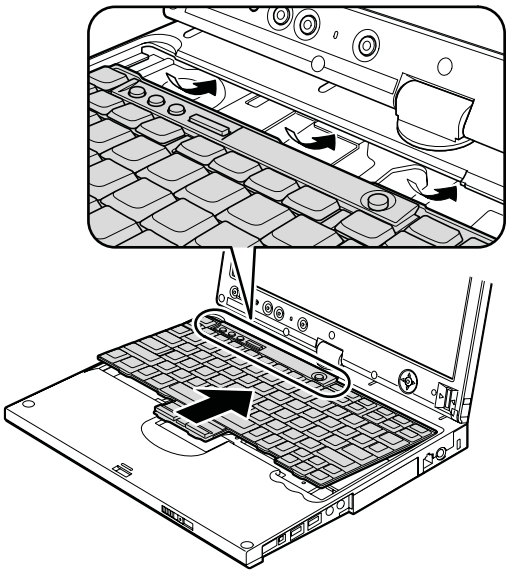

3. To make sure that the front side of the keyboard is housed firmly, gently press the keys with your thumbs and try to slide the keyboard toward you.

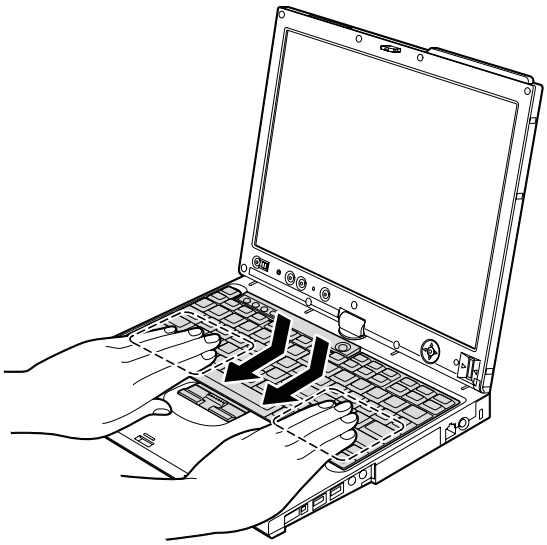

4. Secure the keyboard by tightening the screws from the bottom side of the computer.

Downloaded from www.Manualslib.com manuals search engine

1060 Backup battery

DANGER

Use only the battery specified in the parts list for your computer. Any other battery could ignite or explode.

For access, remove these FRUs in order:
- "1010 Battery pack" on page 54
- "1050 Keyboard" on page 61

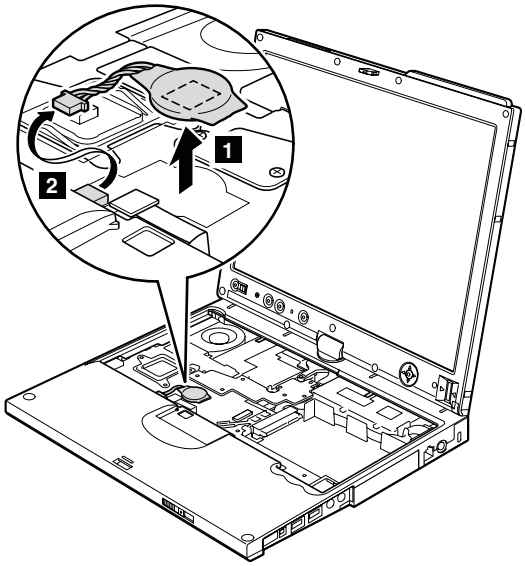

When installing: Make sure that the battery connector is attached firmly.

Downloaded from www.Manualslib.com manuals search engine

1070 LCD extend board

For access, remove these FRUs in order:

- "1010 Battery pack" on page 54
- "1050 Keyboard" on page 61

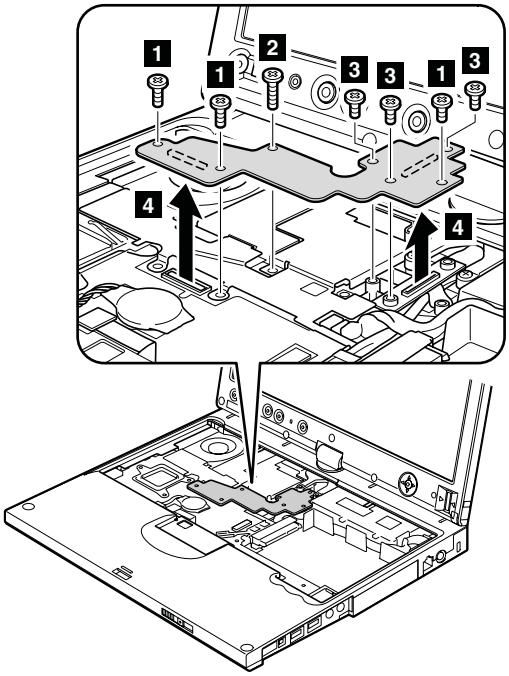

Step	Screw (quantity)	Color	Torque
1	M2 × 6 mm, wafer-head, nylon-coated (3)	Silver	0.167 Nm (1.7 kgfcm)
2	M2 × 9 mm, wafer-head, nylon-coated (1)	Silver	0.167 Nm (1.7 kgfcm)
3	M2 × 2.5 mm, wafer-head, nylon-coated (3)	Silver	0.167 Nm (1.7 kgfcm)

When installing: Make sure that the connectors are attached firmly.

Downloaded from www.Manualslib.com manuals search engine

1080 Keyboard bezel

For access, remove these FRUs in order:

- "1010 Battery pack" on page 54
- "1050 Keyboard" on page 61

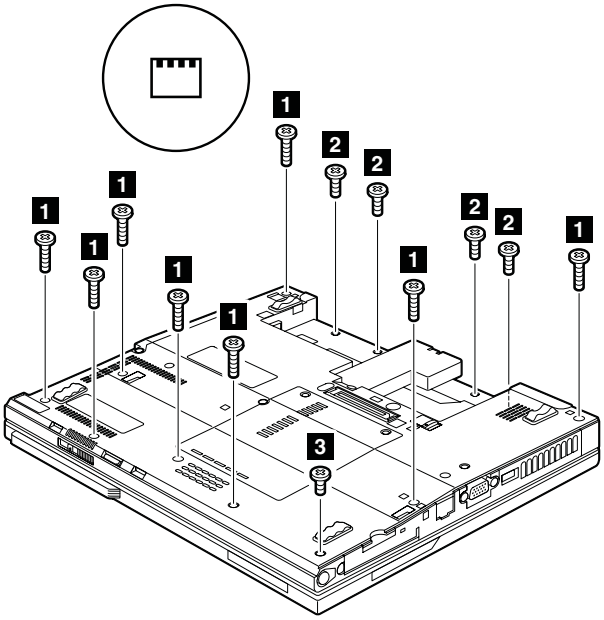

Step	Screw (quantity)	Color	Torque
1	M2 × 6 mm, wafer-head, nylon-coated (8)	Black	0.167 Nm (1.7 kgfcm)
2	M2 × 4 mm, wafer-head, nylon-coated (4)	Silver	0.167 Nm (1.7 kgfcm)
3	M2 × 2 mm, flat-head, nylon-coated (1)	Black	0.167 Nm (1.7 kgfcm)

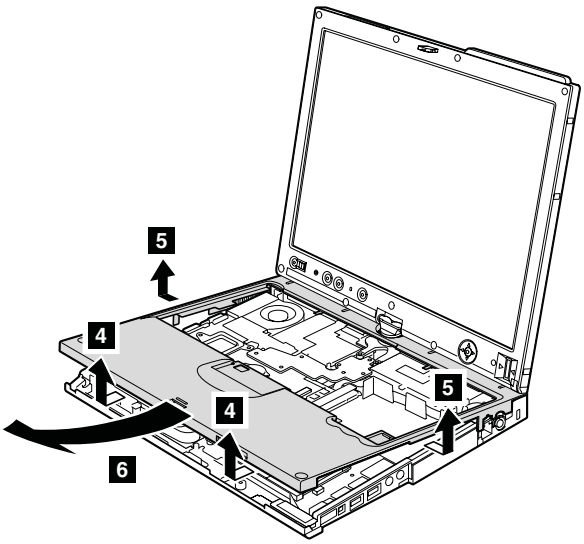

Downloaded from www.Manualslib.com manuals search engine

1090 Modem daughter card (MDC-1.5)

For access, remove these FRUs in order:

- "1010 Battery pack" on page 54
- "1050 Keyboard" on page 61
- "1080 Keyboard bezel" on page 66

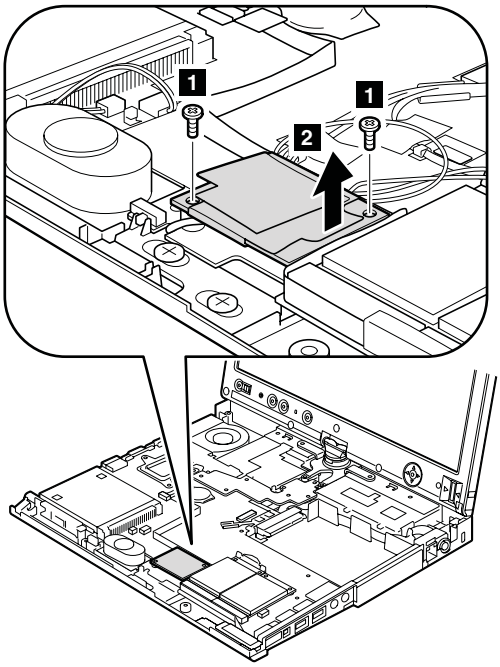

Step	Screw (quantity)	Color	Torque
1	M2 × 3.5 mm, wafer-head, nylon-coated (2)	Silver	0.167 Nm (1.7 kgfcm)

In step 2, remove the card by pulling the tab with your fingers in the direction shown by the arrow.

(continued)

Downloaded from www.Manualslib.com manuals search engine

Turn the card over **3**, and detach the modem connector **4**.

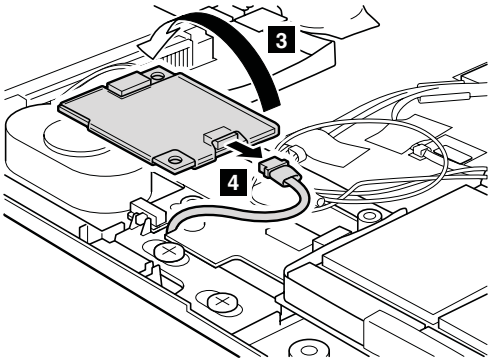

When installing: Make sure that the modem connector and the connector on the underside of the card are attached firmly.

Downloaded from www.Manualslib.com manuals search engine

1100 PCI Express Mini Card for wireless LAN

For access, remove these FRUs in order:

- "1010 Battery pack" on page 54
- "1050 Keyboard" on page 61
- "1080 Keyboard bezel" on page 66

In step **1a** and **1b**, unplug the jacks by using the removal tool antenna RF connector (P/N: 08K7159) or pick the connectors with your fingers and gently unplug them in direction of the arrow.

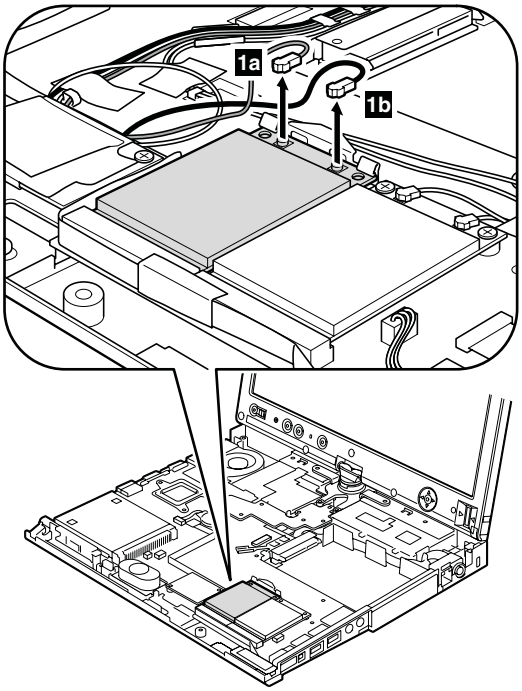

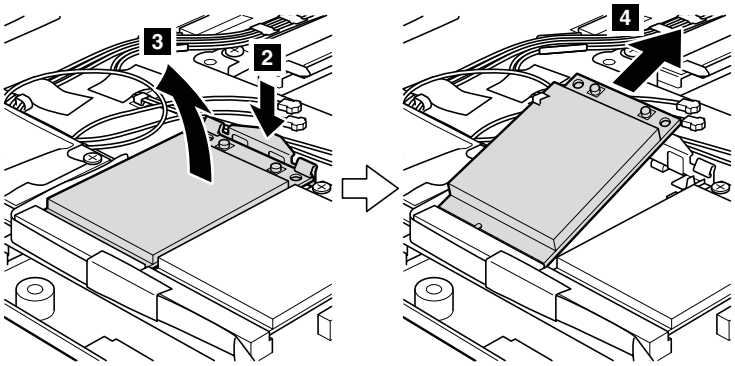

When installing: Plug the gray cable **1a** into the jack labeled **MAIN** on the card, and the black cable **1b** into the jack labeled **AUX**. If the computer you are servicing has three cables, put the white cable in the cable bag in the card slot.

Downloaded from www.Manualslib.com manuals search engine

1110 PCI Express Mini Card for wireless WAN

For access, remove these FRUs in order:

- "1010 Battery pack" on page 54
- "1050 Keyboard" on page 61
- "1080 Keyboard bezel" on page 66

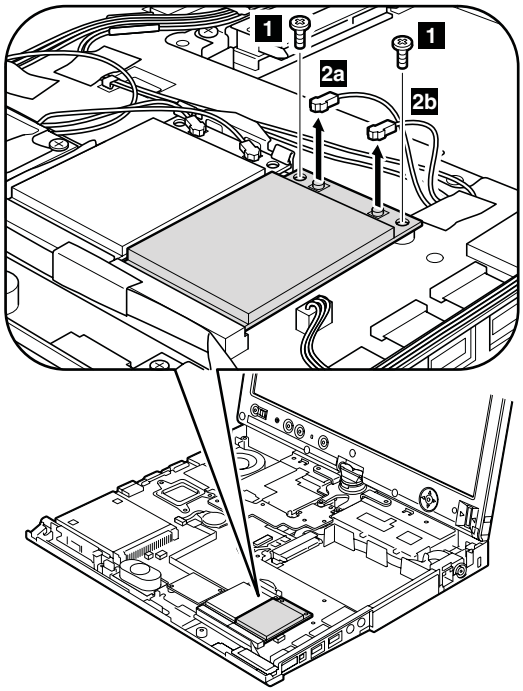

Step	Screw (quantity)	Color	Torque
1	M2 × 3.5 mm, wafer-head, nylon-coated (2)	Silver	0.167 Nm (1.7 kgfcm)

In step 2a and 2b, unplug the jacks by using the removal tool antenna RF connector (P/N: 08K7159) or pick the connectors with your fingers and gently unplug them in direction of the arrow.

When installing: Plug the red cable 2a into the jack labeled **MAIN** on the card, and the blue cable 2b into the jack labeled **AUX**.

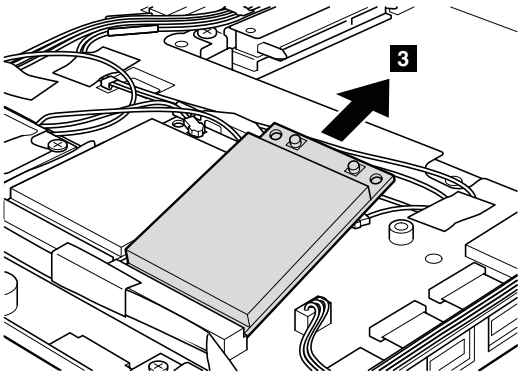

Downloaded from www.Manualslib.com manuals search engine

1120 *Bluetooth* daughter card (BDC-2)

For access, remove these FRUs in order:

- "1010 Battery pack" on page 54
- "1050 Keyboard" on page 61
- "1080 Keyboard bezel" on page 66

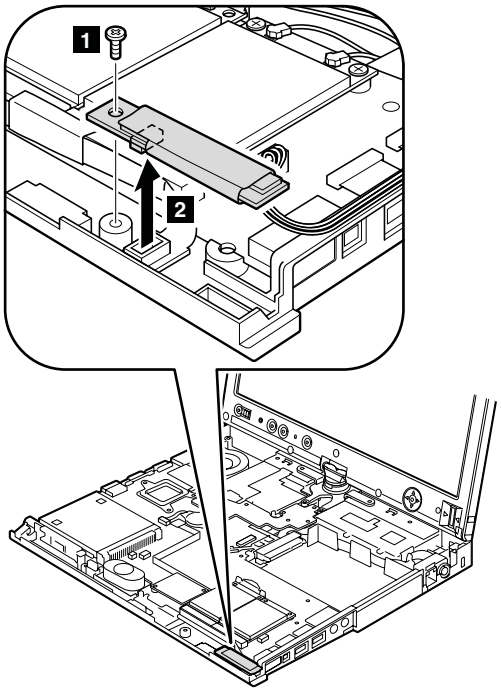

Step	Screw (quantity)	Color	Torque
1	M2.5 × 4 mm, wafer-head, nylon-coated (1)	Black	0.167 Nm (1.7 kgfcm)

When installing: Make sure that the *Bluetooth* connector is attached firmly.

Downloaded from www.Manualslib.com manuals search engine

1130 DC-in connector and modem cable

For access, remove these FRUs in order:

- "1010 Battery pack" on page 54
- "1050 Keyboard" on page 61
- "1080 Keyboard bezel" on page 66

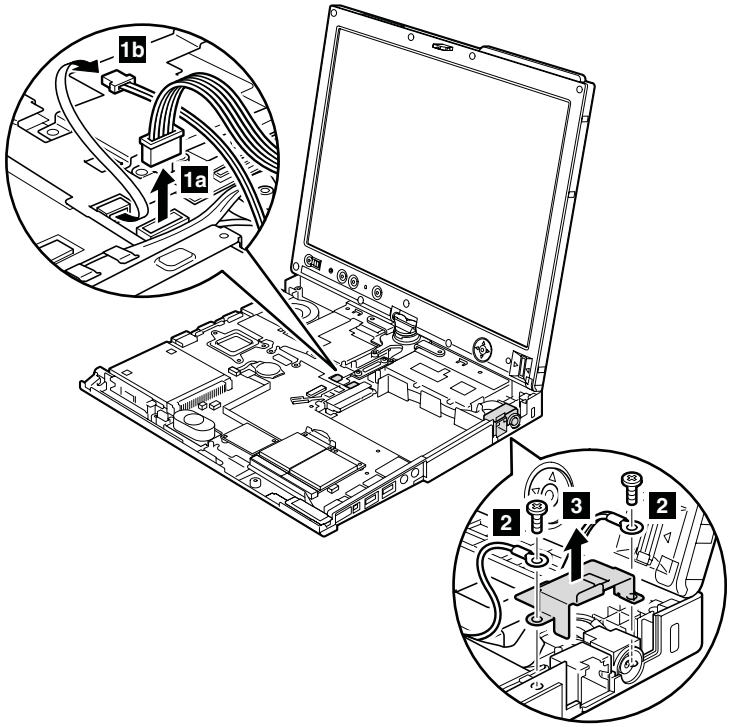

Step	Screw (quantity)	Color	Torque
2	M2 × 3.5 mm, wafer-head, nylon-coated (2)	Silver	0.167 Nm (1.7 kgfcm)

When installing: Make sure that connector is attached firmly.

Cable routing: Route the cables as shown in this figure.

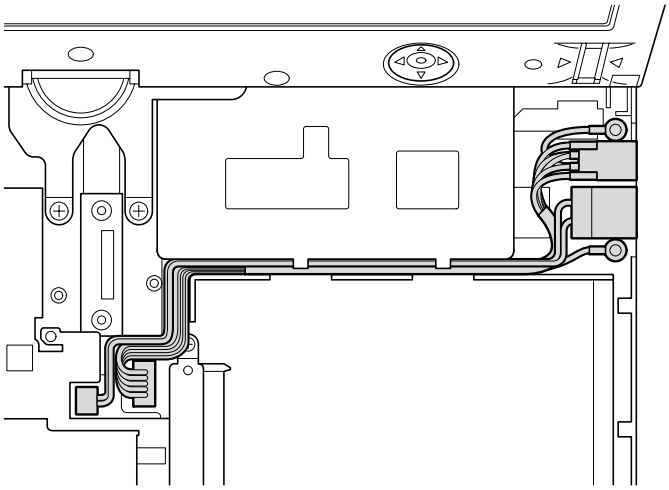

Downloaded from www.Manualslib.com manuals search engine

1140 Speaker assembly

For access, remove these FRUs in order:

- "1010 Battery pack" on page 54
- "1050 Keyboard" on page 61
- "1080 Keyboard bezel" on page 66

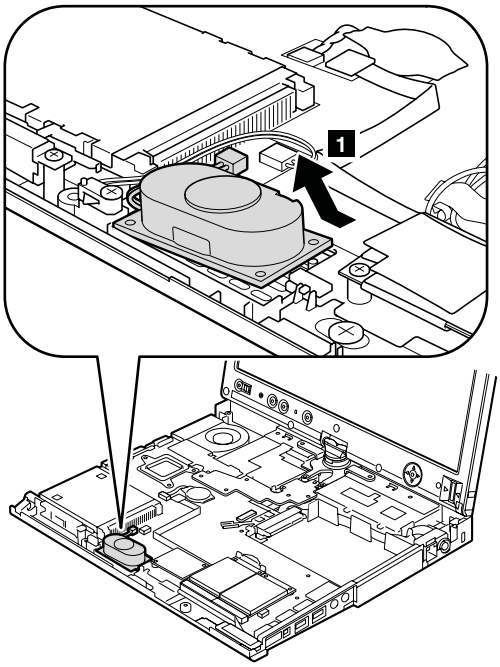

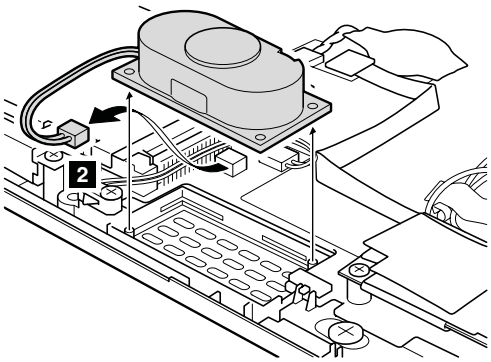

When installing: Make sure that the speaker connector is attached firmly.

Downloaded from www.Manualslib.com manuals search engine

1150 LCD assembly

For access, remove these FRUs in order:

- "1010 Battery pack" on page 54
- "1040 Hinge caps" on page 59
- "1050 Keyboard" on page 61
- "1080 Keyboard bezel" on page 66
- "1100 PCI Express Mini Card for wireless LAN" on page 69
- "1110 PCI Express Mini Card for wireless WAN" on page 70

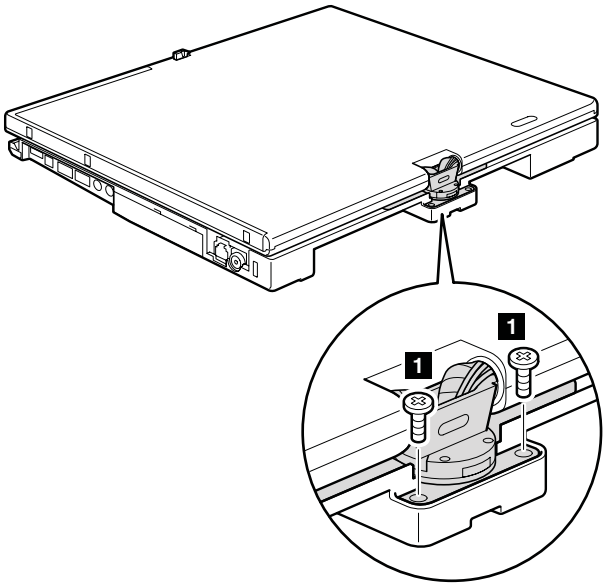

Step	Screw (quantity)	Color	Torque
1	M2.5 × 6 mm, wafer-head, nylon-coated (2)	Black	0.167 Nm (1.7 kgfcm)

(continued)

Downloaded from www.Manualslib.com manuals search engine

In step **2**, strip off the tapes securing the antenna cables (**a**). Then release the antenna cables and the microphone cable (**b**) from the cable guides of the frame.

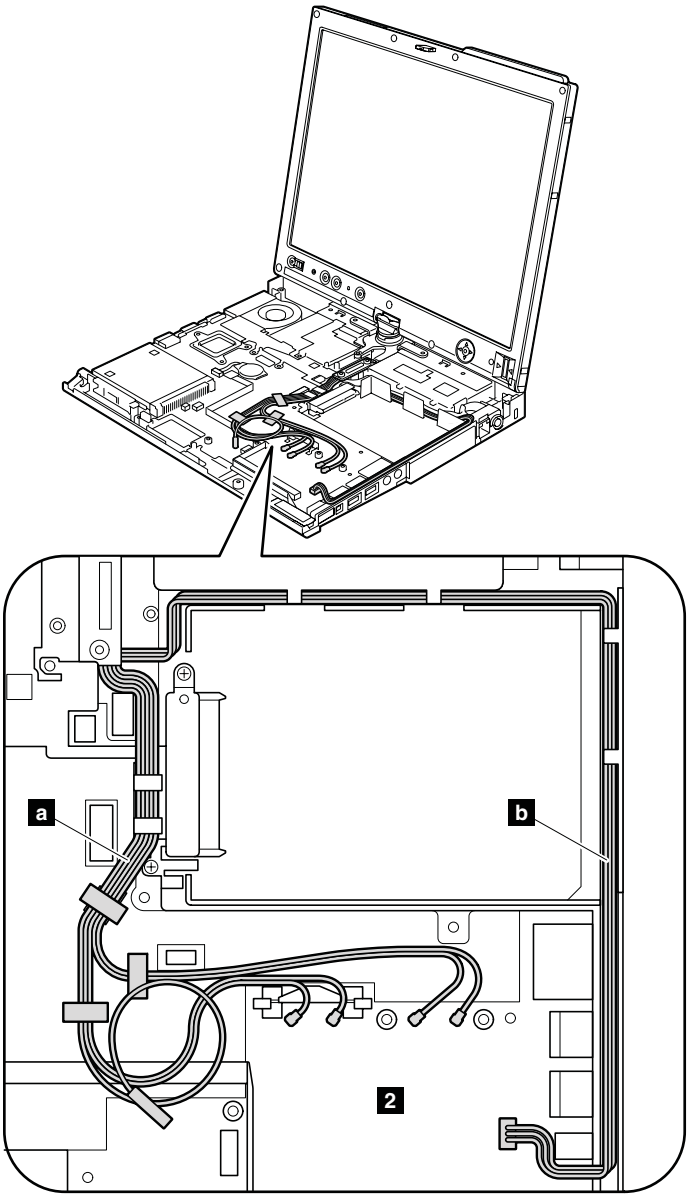

When installing: Make sure that the cables are routed as shown in this figure.

(continued)

Downloaded from www.Manualslib.com manuals search engine

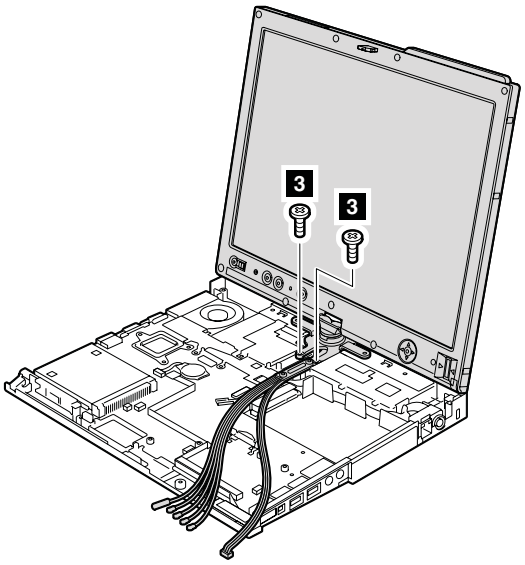

Step	Screw (quantity)	Color	Torque
3	M2.5 × 6 mm, wafer-head, nylon-coated (2)	Black	0.167 Nm (1.7 kgfcm)

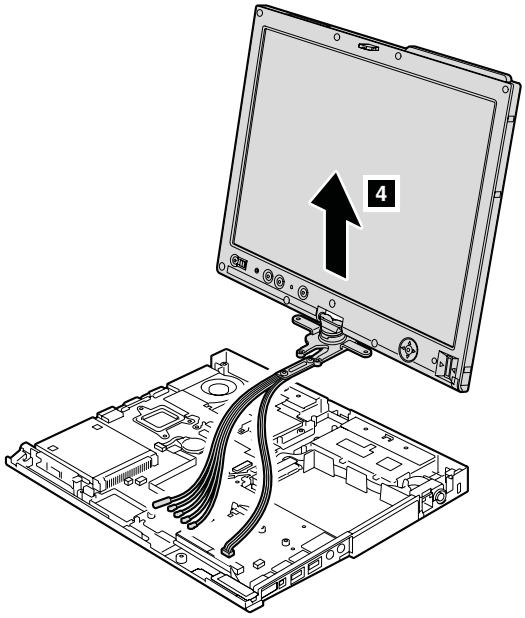

Downloaded from www.Manualslib.com manuals search engine

1160 Pen switch assembly, *Bluetooth* cable, and base cover

For access, remove these FRUs, in order:

- "1010 Battery pack" on page 54
- "1040 Hinge caps" on page 59
- "1050 Keyboard" on page 61
- "1080 Keyboard bezel" on page 66
- "1100 PCI Express Mini Card for wireless LAN" on page 69
- "1110 PCI Express Mini Card for wireless WAN" on page 70
- "1150 LCD assembly" on page 74

Remove the pen switch assembly in steps **1** to **3**. And remove the *Bluetooth* cable in steps **4** and **5**.

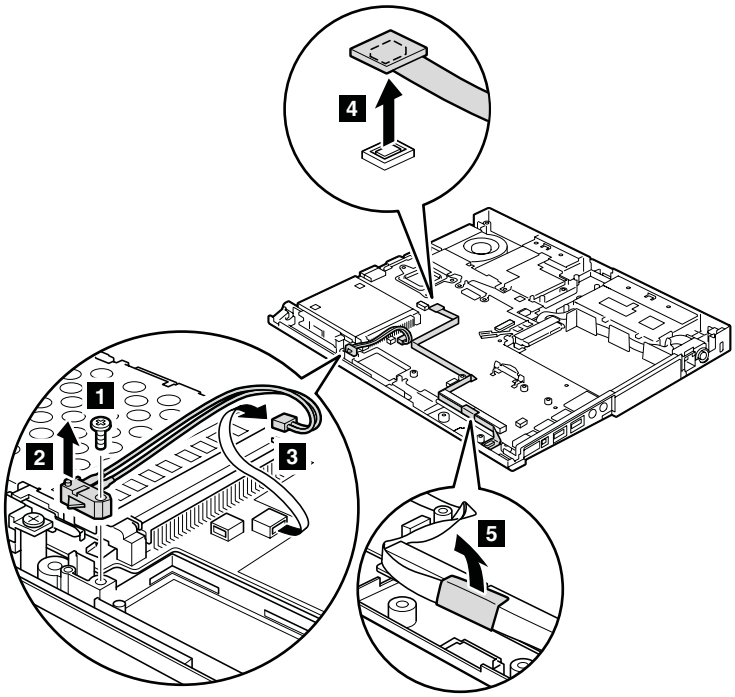

Step	Screw (quantity)	Color	Torque
1	M2 × 6 mm (special), wafer-head, nylon-coated (1)	Black	0.167 Nm (1.7 kgfcm)

(continued)

Downloaded from www.Manualslib.com manuals search engine

Remove the shield bracket.

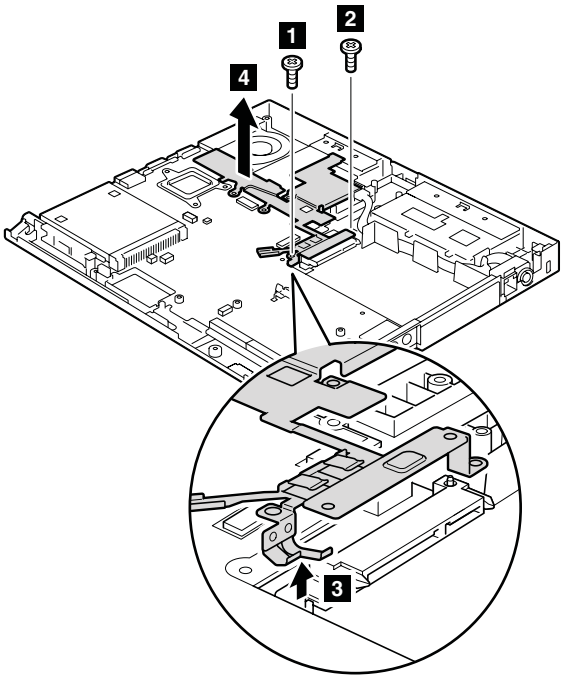

Step	Screw (quantity)	Color	Torque
1	M2 × 3.5 mm, wafer-head, nylon-coated (1)	Silver	0.167 Nm (1.7 kgfcm)
2	M2 × 3 mm, wafer-head, nylon-coated (1)	Silver	0.167 Nm (1.7 kgfcm)

(continued)

Downloaded from www.Manualslib.com manuals search engine

Remove the base cover as in following figures.

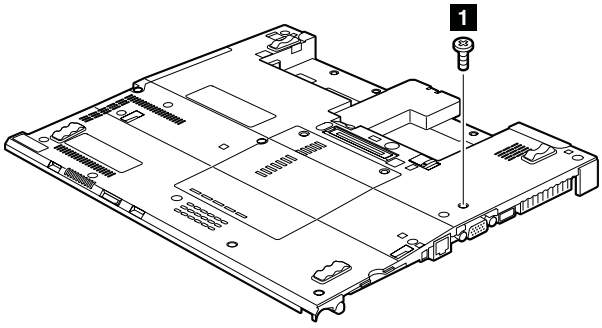

Step	Screw (quantity)	Color	Torque
1	M2 × 6 mm, wafer-head, nylon-coated (1)	Black	0.167 Nm (1.7 kgfcm)

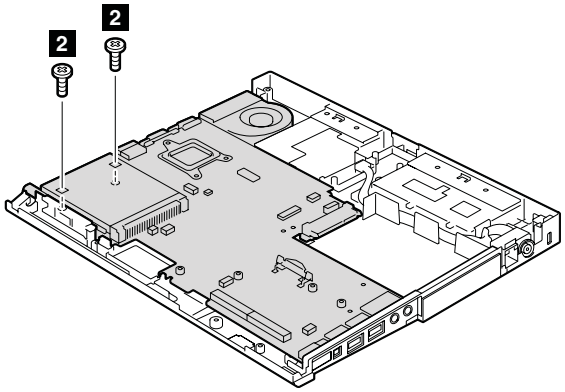

Step	Screw (quantity)	Color	Torque
2	M2 × 3.5 mm, wafer-head, nylon-coated (2)	Silver	0.167 Nm (1.7 kgfcm)

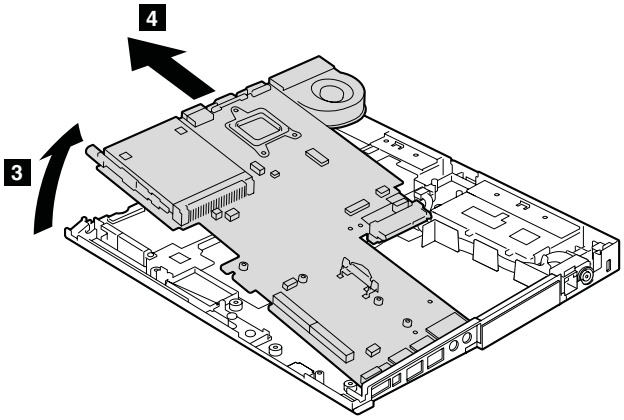

Downloaded from www.Manualslib.com manuals search engine

1170 HDD connector sub card

For access, remove these FRUs in order:

- "1010 Battery pack" on page 54
- "1040 Hinge caps" on page 59
- "1050 Keyboard" on page 61
- "1080 Keyboard bezel" on page 66
- "1100 PCI Express Mini Card for wireless LAN" on page 69
- "1110 PCI Express Mini Card for wireless WAN" on page 70
- "1150 LCD assembly" on page 74
- "1160 Pen switch assembly, ***Bluetooth*** cable, and base cover" on page 77

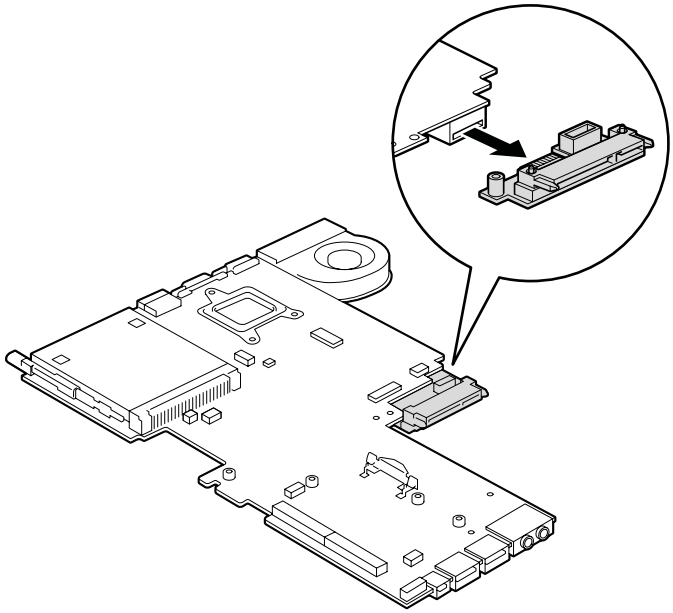

Downloaded from www.Manualslib.com manuals search engine

1180 Fan assembly

For access, remove these FRUs in order:
- "1010 Battery pack" on page 54
- "1040 Hinge caps" on page 59
- "1050 Keyboard" on page 61
- "1080 Keyboard bezel" on page 66
- "1100 PCI Express Mini Card for wireless LAN" on page 69
- "1110 PCI Express Mini Card for wireless WAN" on page 70
- "1150 LCD assembly" on page 74
- "1160 Pen switch assembly, ***Bluetooth*** cable, and base cover" on page 77

Attention: Do not handle the fan roughly. Improper handling of the fan can cause distortion or deformation and imperfect contact with components.

Note: The fan assembly is attached to the underside of the system board.

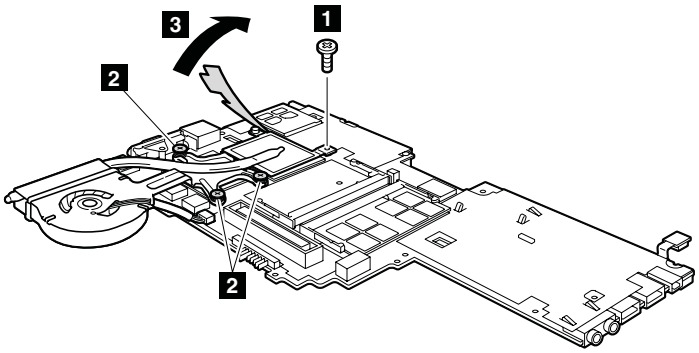

Step	Screw (quantity)	Color	Torque
1	M2 × 3.5 mm, wafer-head, nylon-coated (1)	Silver	0.167 Nm (1.7 kgfcm)

In step 2, loosen the screws, but do not remove them.

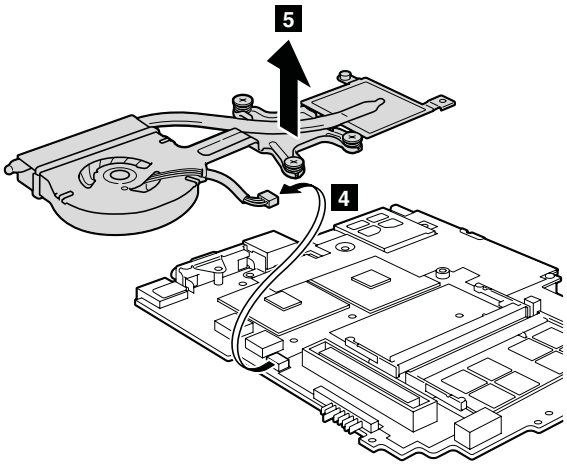

When installing: Make sure that the fan connector is attached firmly.

Downloaded from www.Manualslib.com manuals search engine

1190 System board, PC Card/ExpressCard slots assembly

For access, remove these FRUs, in order:

- "1010 Battery pack" on page 54
- "1040 Hinge caps" on page 59
- "1050 Keyboard" on page 61
- "1080 Keyboard bezel" on page 66
- "1100 PCI Express Mini Card for wireless LAN" on page 69
- "1110 PCI Express Mini Card for wireless WAN" on page 70
- "1150 LCD assembly" on page 74
- "1160 Pen switch assembly, ***Bluetooth*** cable, and base cover" on page 77
- "1170 HDD connector sub card" on page 80
- "1180 Fan assembly" on page 81

Important notices for handling the system board

When handling the system board, bear the following in mind.

- At every point in the process, be sure not to drop or stack the system board.
- The system board has an accelerometer, which can be broken by applying several thousands of G-forces.

  Note: Dropping a system board from a height of as little as 6 inches so that it falls flat on a hard bench can subject the accelerometer to as much as 6,000 G's of shock.
- Be careful not to drop the system board on a bench top that has a hard surface, such as metal, wood, or composite.
- If a system board is dropped, you must test it, using PC-Doctor for DOS, to make sure that the HDD Active Protection still functions (see below).

  Note: If the test shows that HDD Active Protection is not functioning, be sure to document the drop in any reject report, and replace the system board.
- Avoid rough handling of any kind.
- If you put a system board down, be sure to put it only on a padded surface such as an ESD mat or conductive corrugated material.

After replacing the system board, run PC-Doctor for DOS to make sure that HDD Active Protection still functions. The procedure is as follows:

1. Place the computer on a horizontal surface.
2. Run **Diagnostics** --> **ThinkPad Devices** --> **HDD Active Protection Test**.

   Attention: Do not apply physical shock to the computer while the test is running.

Downloaded from www.Manualslib.com manuals search engine

Following components soldered on the top side of the system board are extremely sensitive. When you service the system board, avoid any kind of rough handling.

- **a** Accelerometer chip for the HDD Active Protection System
- **b** Security chip
- **c** CPU
- **d** MCH (Memory Controller Hub)
- **e** ICH (I/O Controller Hub)

Top view of the system board

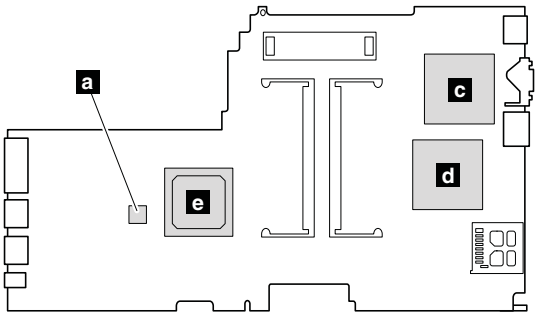

Bottom view of the system board

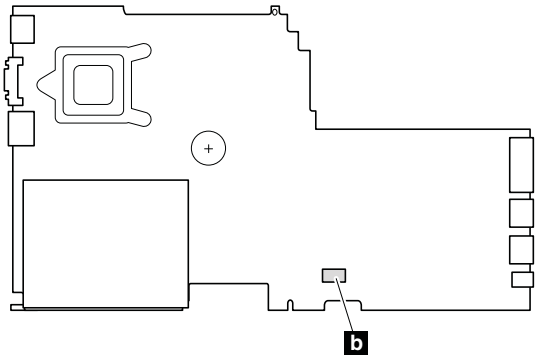

Downloaded from www.Manualslib.com manuals search engine

Note: The PC Card slot assembly is attached to the system board.

In step **1**, press the eject button of the PC Card slot assembly. The eject button pops out.

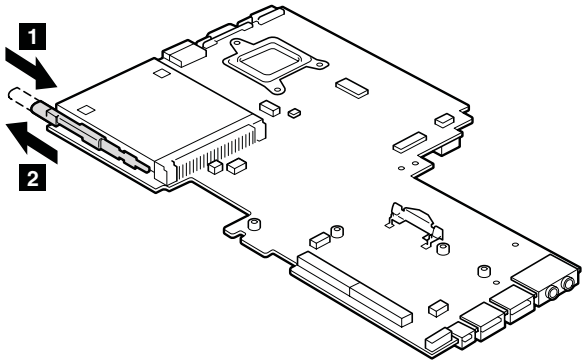

In step **3**, detach the claws of the PC Card slot assembly, and remove the PC Card slot assembly in the direction of arrow **4**.

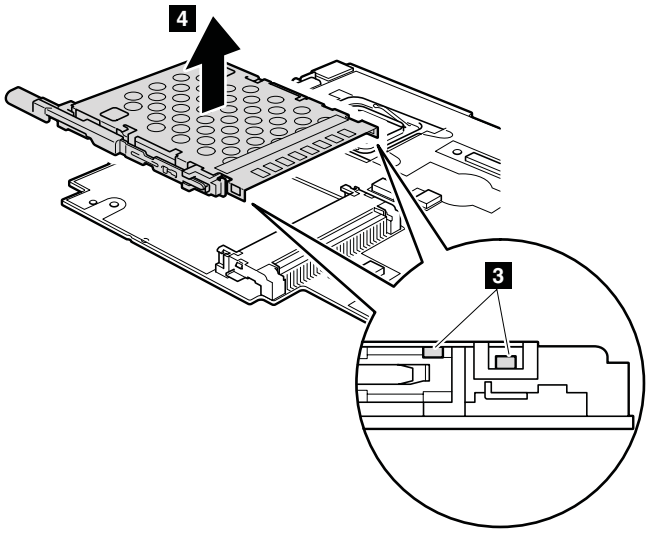

Downloaded from www.Manualslib.com manuals search engine

2010 LCD front bezel

For access, remove this FRU:

- "1010 Battery pack" on page 54

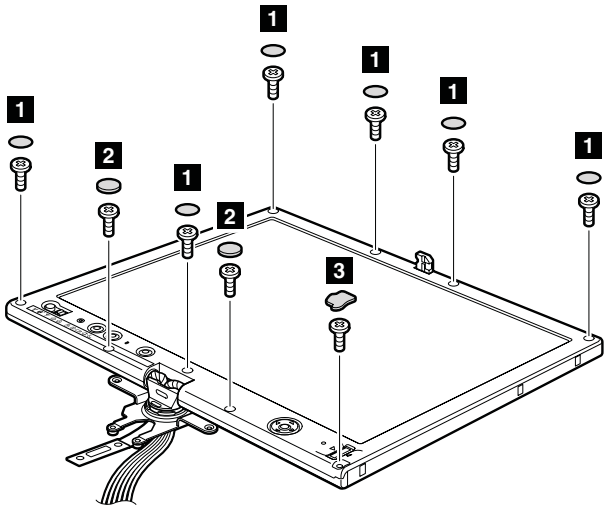

Step	Screw cap	Screw (quantity)	Color	Torque
1	○ (thin)	M2.5 × 8 mm, wafer-head, nylon-coated (6)	Black	0.167 Nm (1.7 kgfcm)
2	○ (thick)	M2.5 × 8 mm, wafer-head, nylon-coated (2)	Black	0.167 Nm (1.7 kgfcm)
3	□	M2.5 × 5 mm, wafer-head, nylon-coated (1)	Black	0.167 Nm (1.7 kgfcm)

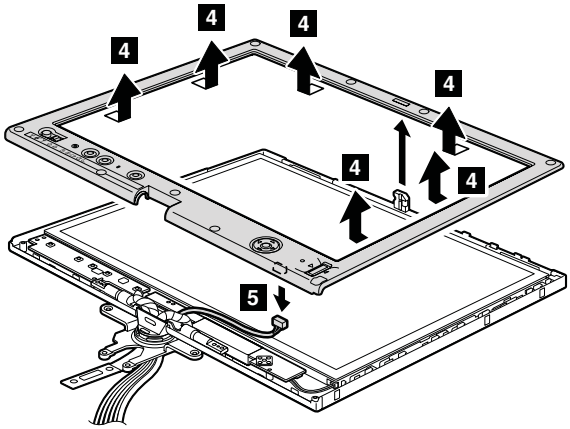

When installing: Make sure that the connector is attached firmly.

Downloaded from www.Manualslib.com manuals search engine

2020 Center latch

For access, remove these FRUs in order:
- "1010 Battery pack" on page 54
- "2010 LCD front bezel" on page 85

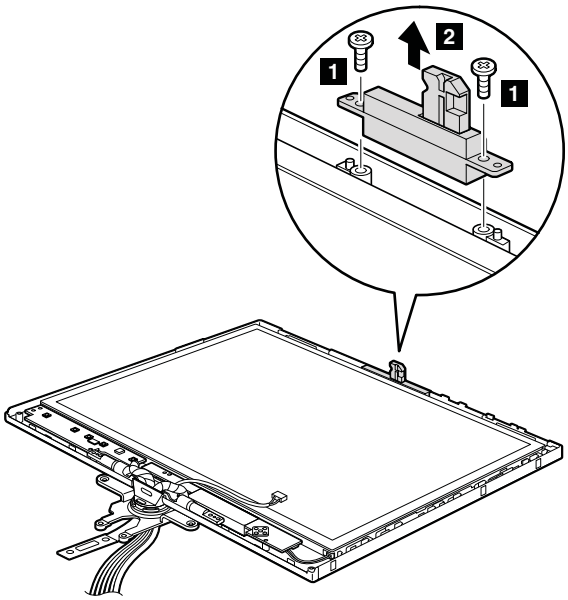

Step	Screw (quantity)	Color	Torque
1	M2 × 3.5 mm, wafer-head, nylon-coated (2)	Silver	0.167 Nm (1.7 kgfcm)

Downloaded from www.Manualslib.com manuals search engine

2030 Fingerprint reader

For access, remove these FRUs in order:
- "1010 Battery pack" on page 54
- "2010 LCD front bezel" on page 85

Note: Fingerprint reader is attached underside of the LCD front bezel.

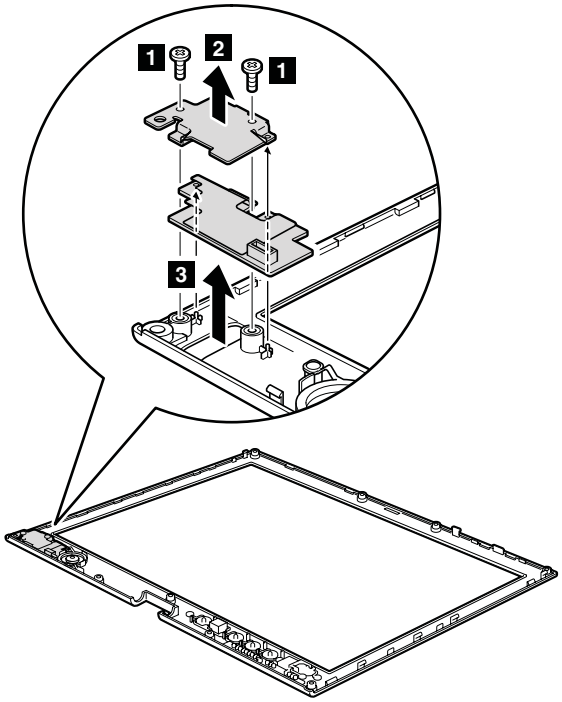

Step	Screw (quantity)	Color	Torque
1	M2 × 3.5 mm, wafer-head, nylon-coated (2)	Silver	0.167 Nm (1.7 kgfcm)

Downloaded from www.Manualslib.com manuals search engine

2040 Inverter card

For access, remove these FRUs in order:
- "1010 Battery pack" on page 54
- "2010 LCD front bezel" on page 85

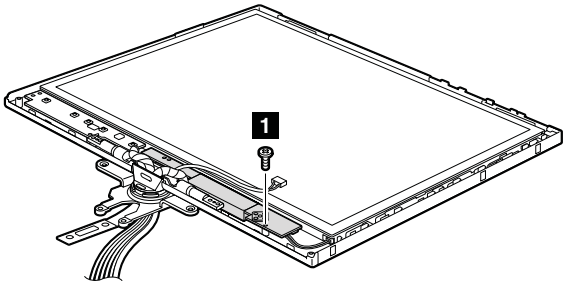

Step	Screw (quantity)	Color	Torque
1	M2 × 3.5 mm, wafer-head, nylon-coated (1)	Silver	0.167 Nm (1.7 kgfcm)

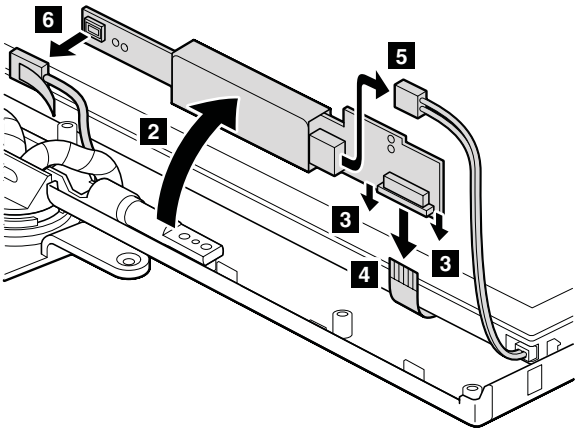

When installing: Make sure that connectors 4, 5, and 6 are attached firmly.

Downloaded from www.Manualslib.com manuals search engine

2050 Micro processor board

For access, remove these FRUs in order:

- "1010 Battery pack" on page 54
- "2010 LCD front bezel" on page 85

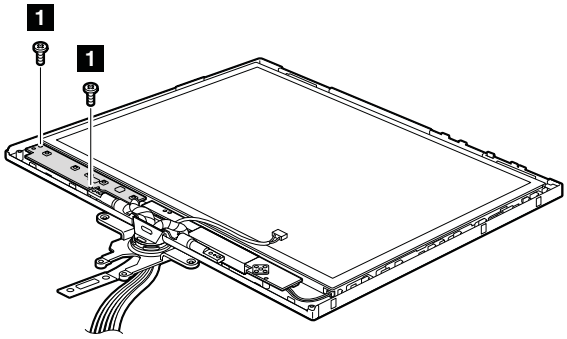

Step	Screw (quantity)	Color	Torque
1	M2 × 3.5 mm, wafer-head, nylon-coated (2)	Silver	0.167 Nm (1.7 kgfcm)

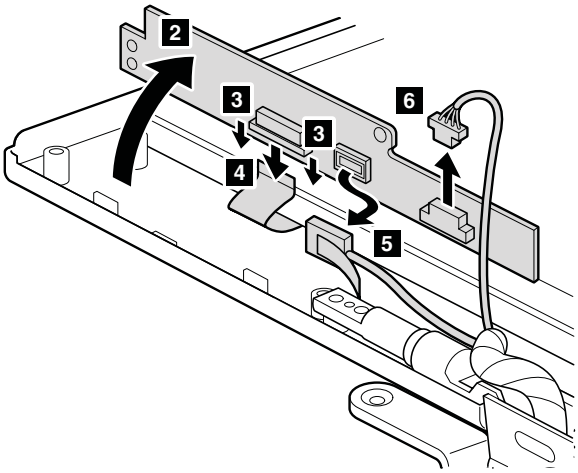

When installing: Make sure that connectors 4, 5, and 6 are attached firmly.

Downloaded from www.Manualslib.com manuals search engine

2060 Hinge and microphone cable

For access, remove these FRUs in order:

- “1010 Battery pack” on page 54
- “1040 Hinge caps” on page 59
- “1050 Keyboard” on page 61
- “1080 Keyboard bezel” on page 66
- “1100 PCI Express Mini Card for wireless LAN” on page 69
- “1110 PCI Express Mini Card for wireless WAN” on page 70
- “1150 LCD assembly” on page 74
- “1160 Pen switch assembly, ***Bluetooth*** cable, and base cover” on page 77
- “2010 LCD front bezel” on page 85
- “2020 Center latch” on page 86
- “2040 Inverter card” on page 88
- “2050 Micro processor board” on page 89

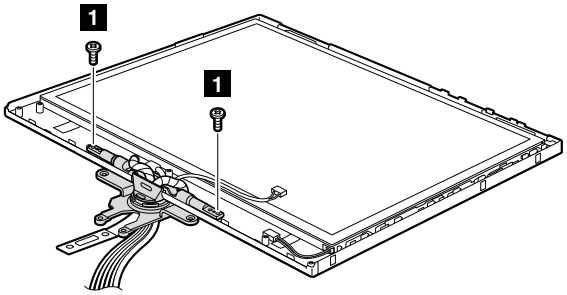

Step	Screw (quantity)	Color	Torque
1	M2.5 × 5 mm, wafer-head, nylon-coated (2)	Black	0.167 Nm (1.7 kgfcm)

(continued)

Downloaded from www.Manualslib.com manuals search engine

Detach the hinge from the LCD rear cover, and gently pull the microphone cable and the other cables out through the guide hole in the hinge. Pull them all at once. As you pull them, be sure not to subject them to any tension, which could cause them to be damaged by the cable guides, or could break a wire.

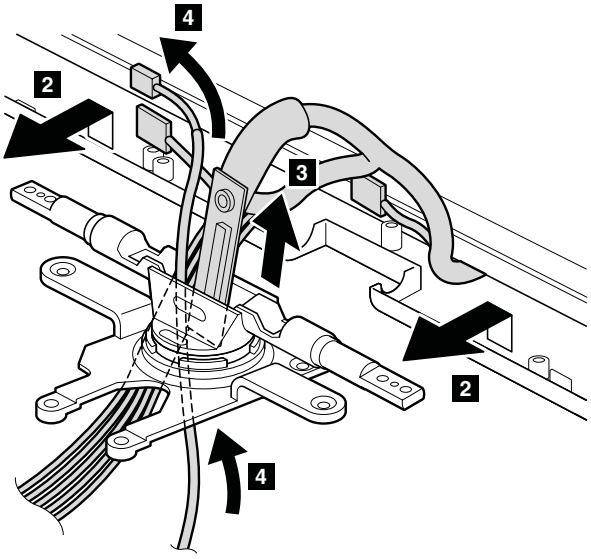

Downloaded from www.Manualslib.com manuals search engine

2070 Micro processor board/inverter card FFC (flexible flat cable), LCD panel with digitizer, and LCD cable

For access, remove these FRUs in order:

- "1010 Battery pack" on page 54
- "1040 Hinge caps" on page 59
- "1050 Keyboard" on page 61
- "1080 Keyboard bezel" on page 66
- "1100 PCI Express Mini Card for wireless LAN" on page 69
- "1110 PCI Express Mini Card for wireless WAN" on page 70
- "1150 LCD assembly" on page 74
- "1160 Pen switch assembly, ***Bluetooth*** cable, and base cover" on page 77
- "2010 LCD front bezel" on page 85
- "2020 Center latch" on page 86
- "2040 Inverter card" on page 88
- "2050 Micro processor board" on page 89
- "2060 Hinge and microphone cable" on page 90

Note: The Micro processor board/inverter card FFC is under the LCD panel, and the LCD cable is attached to the LCD panel.

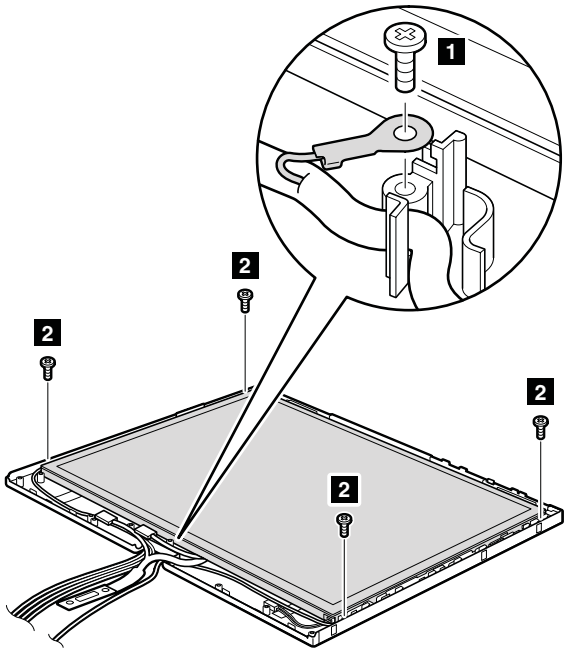

Step	Screw (quantity)	Color	Torque
1	M2 × 3.5 mm, wafer-head, nylon-coated (1)	Silver	0.167 Nm (1.7 kgfcm)
2	M2 × 3.5 mm, flat-head, nylon-coated (4)	Silver	0.167 Nm (1.7 kgfcm)

(continued)

Downloaded from www.Manualslib.com manuals search engine

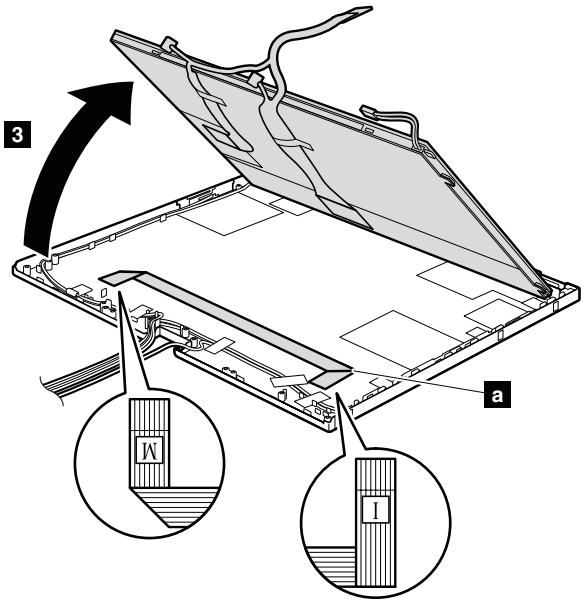

When installing: Place the FFC (a) on the rear cover of the LCD, in the direction shown in the figure above.

Remove the LCD cable (b) from the LCD panel.

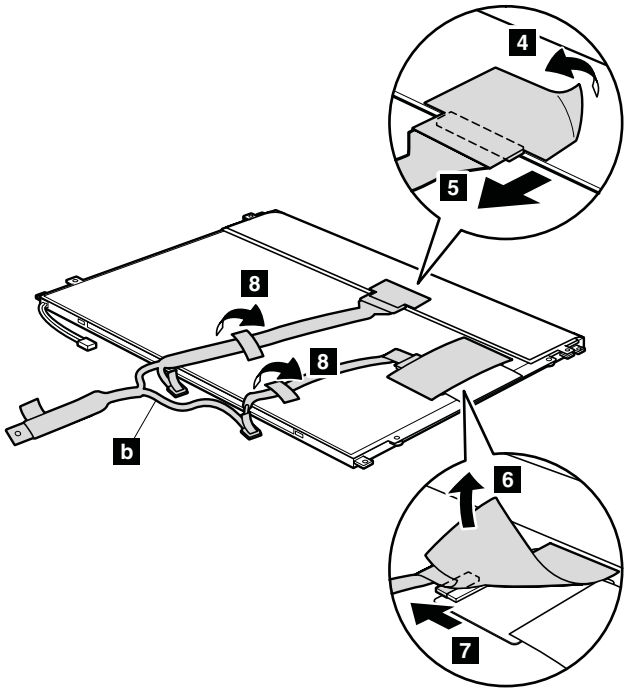

When installing: Make sure that the connectors of the LCD cable are attached firmly.

Downloaded from www.Manualslib.com manuals search engine

2080 Wireless antenna cables and LCD rear cover

For access, remove these FRUs in order:

- "1010 Battery pack" on page 54
- "1040 Hinge caps" on page 59
- "1050 Keyboard" on page 61
- "1080 Keyboard bezel" on page 66
- "1100 PCI Express Mini Card for wireless LAN" on page 69
- "1110 PCI Express Mini Card for wireless WAN" on page 70
- "1150 LCD assembly" on page 74
- "1160 Pen switch assembly, ***Bluetooth*** cable, and base cover" on page 77
- "2010 LCD front bezel" on page 85
- "2020 Center latch" on page 86
- "2040 Inverter card" on page 88
- "2050 Micro processor board" on page 89
- "2060 Hinge and microphone cable" on page 90
- "2070 Micro processor board/inverter card FFC (flexible flat cable), LCD panel with digitizer, and LCD cable" on page 92

Wireless LAN antenna cables:
Strip off the tapes securing the antenna cables (a) and release the cables from the cable guide at first. Steps 1 to 3 are for the AUX antenna of the wireless LAN, steps 4 to 6 are for the 3rd antenna of the wireless LAN, and steps 7 to 9 are for the MAIN antenna of the wireless LAN. Some models do not have a 3rd antenna.

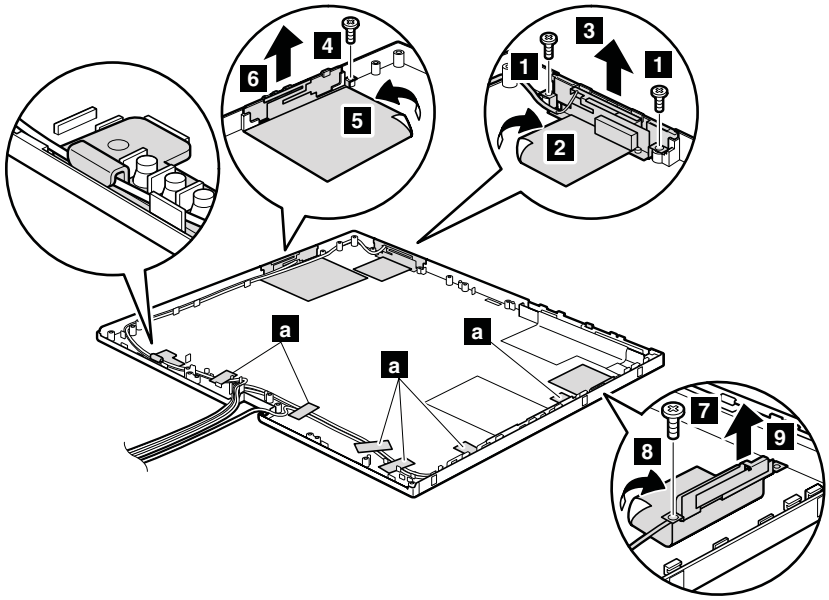

Step	Screw (quantity)	Color	Torque
1	M2 × 3.5 mm, wafer-head, nylon-coated (2)	Silver	0.167 Nm (1.7 kgfcm)
4	M2 × 3.5 mm, wafer-head, nylon-coated (1)	Silver	0.167 Nm (1.7 kgfcm)
7	M2 × 2.5 mm, wafer-head, nylon-coated (1)	Silver	0.167 Nm (1.7 kgfcm)

(continued)

Downloaded from www.Manualslib.com manuals search engine

Wireless WAN antenna cables:
Strip off the tapes securing the antenna cables (a) at first. Steps 1 and 2 are for the wireless WAN MAIN antenna, and steps 3 and 5 are for the wireless WAN AUX antenna. Some models do not have these antennas.

Remove the wireless WAN antenna cables as follows:

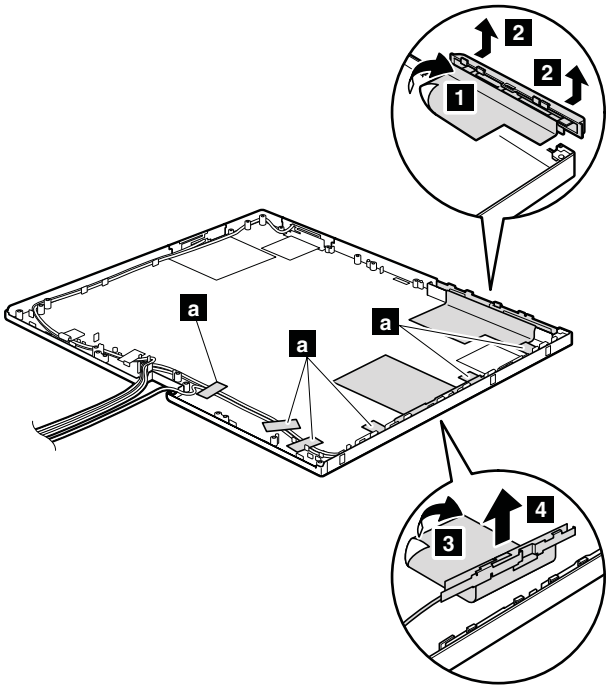

Cable routing: When you attach the antenna cables, route the cables as shown in this figure.

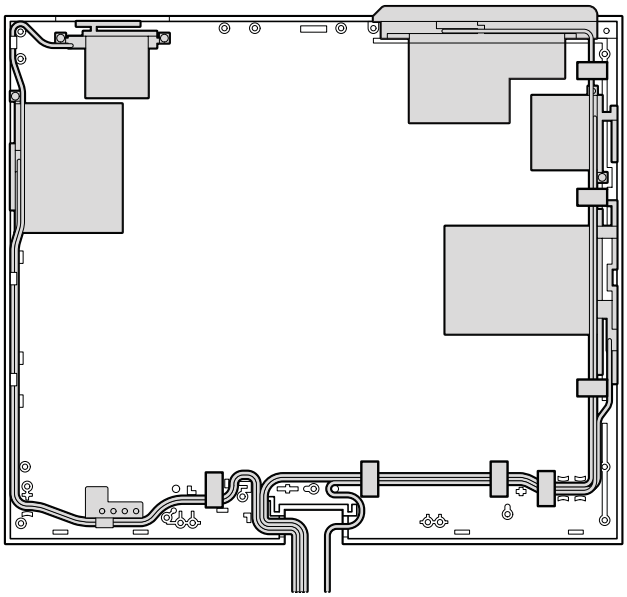

Downloaded from www.Manualslib.com manuals search engine

Locations

Front view

1 Center latch
2 Wireless LAN antenna (MAIN)
3 Wireless WAN antenna (AUX)
4 Security key hole
5 AC power connector
6 RJ-11 (modem) connector
7 Hard disk drive
8 Microphone jack
9 Stereo headphone jack
10 Universal serial bus (USB) connectors
11 IEEE 1394 connector (some models)
12 Infrared port
13 TrackPoint pointing stick
14 Center latch lever
15 TrackPoint buttons
16 Volume control buttons
17 ThinkVantage button
18 Power switch

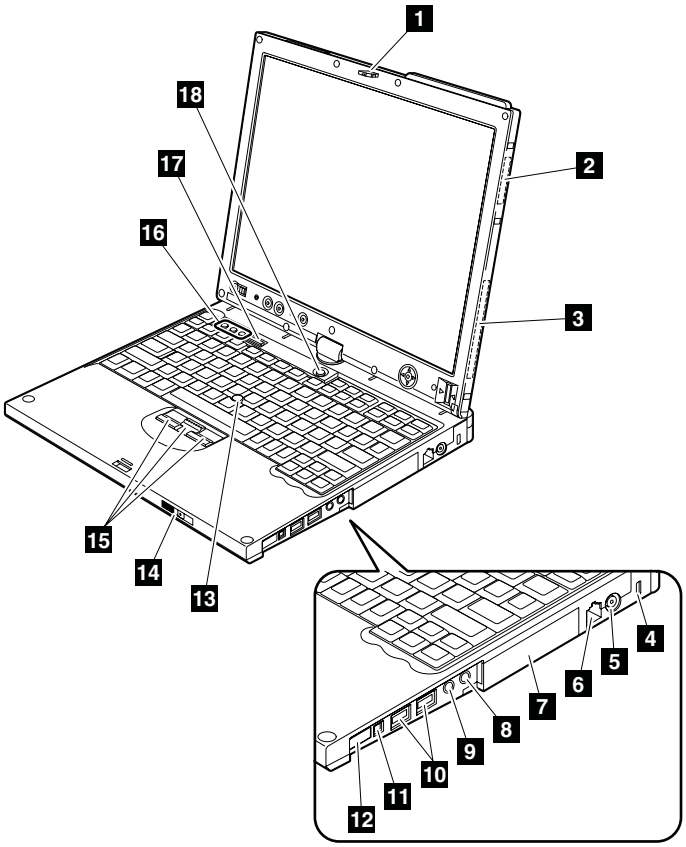

Downloaded from www.Manualslib.com manuals search engine

Rear view

1. Status indicators
   Note: For the description of each indicator, see “Status indicators” on page 36.
2. Wireless LAN antenna (3rd)
3. Tablet digitizer pen
4. PC Card/ExpressCard slots eject buttons
5. PC Card/ExpressCard slots
6. SD card slots
7. RJ-45 (Ethernet) connector
8. External monitor connector
9. USB connector

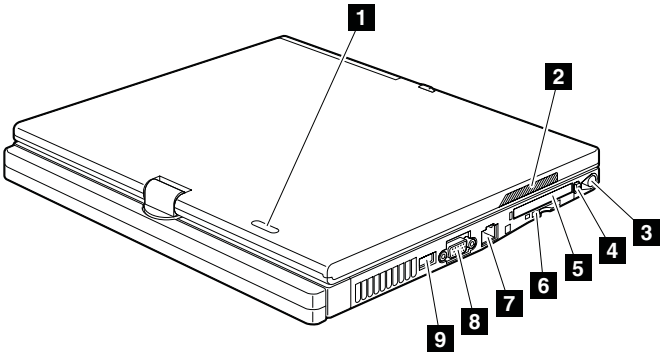

Rear view (tablet mode)

1. Tablet buttons
2. Fingerprint reader
3. Status indicators
   Note: For the description of each indicator, see “Status indicators” on page 36.

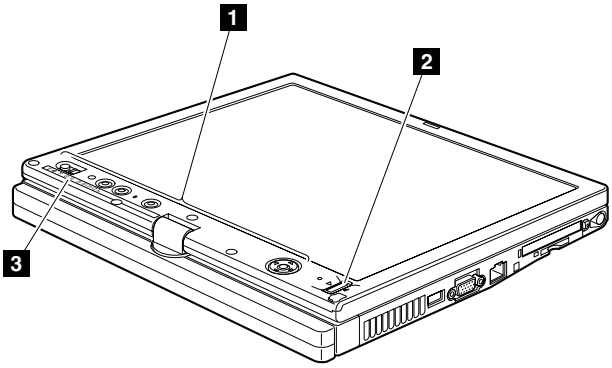

Downloaded from www.Manualslib.com manuals search engine

Bottom view

1. Battery lock knob
2. Battery pack
3. Docking connector
4. Battery pack release latch
5. DIMM slot
6. Wireless LAN antenna (AUX)
7. Wireless radio switch
8. Wireless WAN antenna (MAIN)

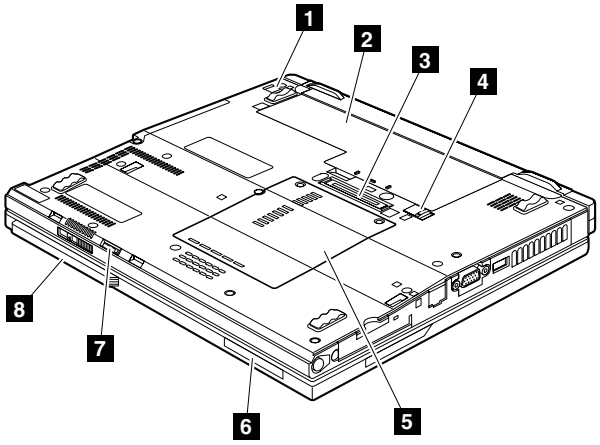

Downloaded from www.Manualslib.com manuals search engine

Rear view (ThinkPad X6 Tablet UltraBase)

1. AC power connector
2. USB connectors
3. External monitor connector
4. Serial connector
5. Parallel connector
6. Headphone jack
7. Microphone jack
8. R-45 (Ethernet) connector
9. R-11 (modem) connector
10. Security lock key
11. UltraBase lock
12. Ultrabay Slim device release latch
13. Ultrabay Slim device
14. Docking connector

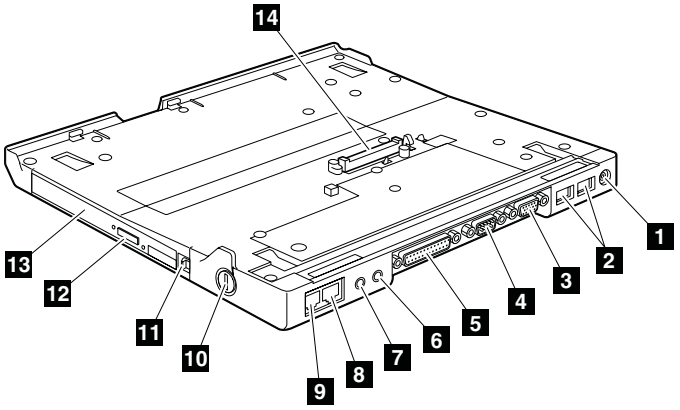

Bottom view (ThinkPad X6 Tablet UltraBase)

1. Security keyhole
2. USB connectors
3. UltraBase eject request button
4. UltraBase eject lever
5. Built-in stereo speakers
6. Power button

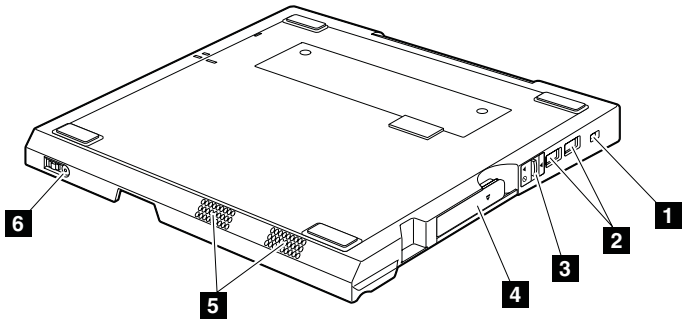

Downloaded from www.Manualslib.com manuals search engine

Parts list

Overall

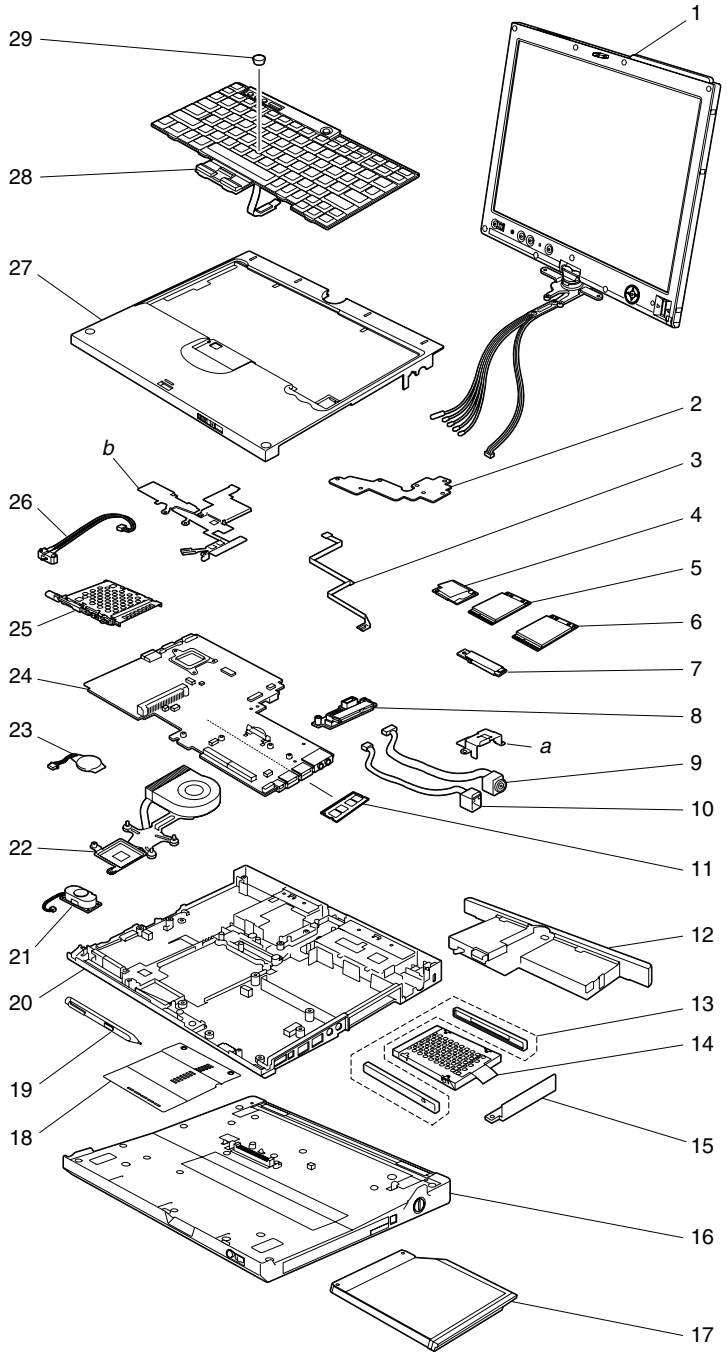

Downloaded from www.Manualslib.com manuals search engine

- Each FRU is available for all types or models, unless specific types or models are specified.
- FRU with specific models listed and described as xxU (where U is an example of a country designator) should be used for all models ending in U.
- FRU with specific models listed and described as 3Dx (where 3D is an example of a unique configuration) should be used for all of these models, unless specific country or region designator is specified.
- A CRU (customer replaceable unit) is identified by a single asterisk (*) or two asterisks (**) in the CRU ID column. An N in the CRU ID column means the part is not a CRU. A single asterisk (*) means the part is a Tier 1 CRU; two asterisks (**) means the part is a Tier 2 CRU.

  A tier 1 CRU is very easy to remove and replace. It can be done by virtually all customers. A tier 2 CRU may require the use of a common tool to remove and replace it.
- A RoHS compliant FRU is identified by an R. An N in the RoHS ID column means the part is not a RoHS compliant FRU.
- FRUs marked with **OP** are available as options.

No.	FRU	FRU no.	RoHS ID	CRU ID
a - d	See “Miscellaneous parts” on page 120.			
1	LCD unit (see “LCD FRUs” on page 110.)			
2	Extension cable card	41W1477	R	N
3	*Bluetooth* cable	93P4371	R	N
4	Modem daughter card (MDC-1.5)	39T0495	R	N
5	ThinkPad 11a/b/g Wireless LAN Mini PCI Express Adapter • 6363-CTO, 74x, 75x, 78x, ZZx • 6364-CTO • 6365-CTO • 6366-CTO • 6367-CTO • 6368-CTO			
	xxB, xxC, xxF, xxG, xxH, xxL, xxM, xxP, xxQ, xxS, xxU, xxY	39T5578	R	N
	xxE, xxJ	39T5579	R	N
	xxV	39T5580	R	N
	xxA, xxT (802.11 b/g)	39T5581	R	N
	xxK	39T5582	R	N

(continued)

Downloaded from www.Manualslib.com manuals search engine

No.	FRU	FRU no.	RoHS ID	CRU ID
5	Intel PRO Wireless 3945ABG Mini-PCI Express Adapter • 6363-CTO, 34x, 35x, 46x, 47x, 48x, 4Gx, 54x, 57x, 58x, 64x, 65x, 66x, 6Dx, 85x, 86x, 8Ax, 8Cx, 8Dx, 8Mx, 94x, 95x, 99x, A7x, A8x, A9x, ACx, ADx, AMx, ANx, B3x, C3x, E3x, F3x, F4x, F8x, H3x, H4x, K3x, K4x, K5x, F9x, M3x, M4x, M5x, M6x, Q3x • 6364-CTO, 46x, 54x, 64x, 6Dx, 85x, 8Dx, A7x, ADx • 6365-CTO, 23x, 25x, 37x, 4Ax, 4Bx, 4Fx, 8Gx, AGx, F3x, F5x, K4x, K6x, M5x • 6366-CTO, 4Dx, 4Fx, 6Ax, 6Fx, 98x, 9Ax, AJx, APx, B4x, F6x, H5x, K7x, L3x, M7x • 6367-CTO • 6368-CTO			
	xxA, xxB, xxF, xxH, xxL, xxM, xxP, xxQ, xxS, xxU, xxV, xxY	42T0853	R	N
	xxG	42T0855	R	N
	xxC, xxK	42T0857	R	N
	xxE, xxJ	42T0859	R	N
	xxT (802.11 b/g)	42T0861	R	N
	ThinkPad 11a/b/g/n Wireless LAN Mini-PCI Express Adapter • 6363-CTO, 87x, 88x, 89x, 8Bx, AAx, ABx • 6364-CTO • 6365-CTO, 8Lx, ALx • 6366-CTO, 8Kx, 8Lx, ALx • 6367-CTO • 6368-CTO			
	xxA, xxB, xxC, xxF, xxH, xxL, xxM, xxP, xxQ, xxS, xxU, xxY	42T0825	R	N
	xxE, xxJ	42T0827	R	N
	xxV	42T0829	R	N
	xxK	42T0831	R	N
	xxT (802.11 b/g)	42T0833	R	N
6	Sierra Wireless EV-DO Wireless WAN Mini PCI Express Adapter • 6363-CTO, 74x, 75x, 94x, C3x • 6364-CTO • 6365-CTO • 6366-CTO, 76x, 96x, 98x, C4x, L3x • 6367-CTO • 6368-CTO	41W1177	R	N
	Sierra Wireless EV-DO Wireless WAN Mini PCI Express Adapter • 6363-CTO, 78x, 99x • 6364-CTO • 6365-CTO • 6366-CTO, 9Ax • 6367-CTO • 6368-CTO	42T0863	R	N

(continued)

Downloaded from www.Manualslib.com manuals search engine

No.	FRU	FRU no.	RoHS ID	CRU ID
6	Sierra Wireless MC8755 PCI Express MiniCard • 6363-CTO, B3x, B4x, Q3x • 6364-CTO • 6365-CTO • 6366-CTO • 6367-CTO • 6368-CTO	42T0835	R	N
	Integrated Cingular HSDPA 3G Wireless Broadband Network Adapter • 6363-CTO, 95x • 6364-CTO • 6365-CTO • 6366-CTO, 77x, 97x, C5x • 6367-CTO • 6368-CTO	42T0804	R	N
7	*Bluetooth* daughter card (BDC-2) • 6363-CTO, 47x, 48x, 57x, 65x, 66x, 85x, 86x, 87x, 88x, 89x, 8Ax, 8Bx, 8Cx, 8Dx, 8Mx, 94x, 95x, 99x, A7x, A8x, A9x, AAx, ABx, ACx, ADx, AMx, ANx, B3x, C3x, ZZx, F9x, F3x, F4x, F8x, H3x, H4x, K3x, K4x, K5x, M3x, M4x, M5x, M6x, Q3x • 6364-CTO, 85x, 8Dx, A7x, ADx • 6365-CTO, 4Fx, 8Gx, 8Lx, AGx, ALx, F3x, K4x, K6x, M5x • 6366-CTO, 4Fx, 6Ax, 6Fx, 8Kx, 8Lx, 98x, 9Ax, AJx, ALx, APx, B4x, H5x, K7x, L3x, M7x • 6367-CTO • 6368-CTO	39T0497	R	N
8	HDD sub card	41W1475	R	N
9	DC-in cable assembly	93P4367	R	N
10	RJ11 cable assembly kit	93P4369	R	N
11	256-MB DDR2-667 SDRAM SO-DIMM (PC2-5300) card • 6363-CTO • 6364-CTO • 6365-CTO • 6366-CTO • 6367-CTO, 44x • 6368-CTO	40Y8401	R	*
	512-MB DDR2-667 SDRAM SO-DIMM (PC2-5300) card • 6363-CTO, 34x, 35x, 46x, 47x, 48x, 4Gx, 57x, 58x, 65x, 87x, 8Ax, 8Bx, 8Cx, 94x, 95x, 99x, A8x, A9x, AAx, ABx, ACx, AMx, C3x, E3x, F3x, F4x, F8x, H3x, H4x, K3x, K4x, K5x, M5x, M6x, ZZx • 6364-CTO, 46x • 6365-CTO, 23x, 25x, 37x, 4Bx, 4Fx, 8Lx, AGx, ALx, F3x, F5x, K4x, M5x • 6366-CTO, 4Dx, 4Fx, 6Ax, 6Fx, 8Lx, ALx, F6x, H5x, K7x • 6367-CTO • 6368-CTO, A3x	40Y8402	R	*

(continued)

Downloaded from www.Manualslib.com manuals search engine

No.	FRU	FRU no.	RoHS ID	CRU ID
11	1-GB DDR2-667 SDRAM SO-DIMM (PC2-5300) card • 6363-CTO, 54x, 64x, 66x, 6Dx, 74x, 75x, 78x, 85x, 86x, 88x, 89x, 8Dx, 8Mx, A7x, ADx, ANx, B3x, F9x, M3x, M4x, Q3x • 6364-CTO, 54x, 64x, 85x, 6Dx, 8Dx, A7x, ADx • 6365-CTO, 4Ax, 8Gx, K6x • 6366-CTO, 8Kx, 98x, 9Ax, AJx, APx, B4x, L3x, M7x • 6367-CTO • 6368-CTO	40Y8403	R	*
	2-GB DDR2-533 SDRAM SO-DIMM (PC2-4200) card • 6363-CTO • 6364-CTO • 6365-CTO • 6366-CTO • 6367-CTO • 6368-CTO	73P3847	R	*
12	Battery pack, Li-ion (4 cell, 2.0 Ah) • 6363-CTO, 34x, 48x, 65x, 66x, 88x, 89x, 8Ax, 8Bx, 8Cx, ACx, E3x, F3x, F4x, F9x, H3x, K3x, K4x, K5x, M5x, Q3x, ZZx • 6364-CTO • 6365-CTO, 23x, 37x, 4Ax, 4Fx, 8Lx, ALx, F3x, K4x, M5x • 6366-CTO, 4Dx, 4Fx, 6Ax, ALx, 8Lx, F6x, H5x, K7x • 6367-CTO, 44x • 6368-CTO			
	Sanyo	42T5250	R	*
	LGC	42T5259	R	*
	Battery pack, Li-ion (8 cell, 4.55 Ah), Sanyo • 6363-CTO, 35x, 46x, 47x, 4Gx, 54x, 57x, 58x, 64x, 6Dx, 74x, 75x, 78x, 85x, 86x, 87x, 8Dx, 8Mx, 94x, 95x, 99x, A7x, A8x, A9x, AAx, ABx, ADx, AMx, ANx, B3x, C3x, F8x, H4x, M3x, M4x, M6x, ZZx • 6364-CTO, 46x, 54x, 64x, 6Dx, 85x, 8Dx, A7x, ADx • 6365-CTO, 25x, 4Bx, 8Gx, AGx, F5x, K6x • 6366-CTO, 6Fx, 8Kx, 98x, 9Ax, AJx, APx, B4x, L3x, M7x • 6367-CTO • 6368-CTO, A3x	42T5251	R	*
—	Extended battery, Li-ion, Panasonic	40Y7904	R	*
—	Extended battery support bracket	42W2534	R	*
13	Hard disk drive rubber rails	42W2900	R	*

(continued)

Downloaded from www.Manualslib.com manuals search engine

No.	FRU	FRU no.	RoHS ID	CRU ID
14	SATA hard disk drive, 40 GB, 9.5 mm, 5,400 rpm • 6363-CTO • 6364-CTO • 6365-CTO, 23x, 37x • 6366-CTO • 6367-CTO, 44x • 6368-CTO			
	Fujitsu	39T2637	R	*
	HGST	39T2701	R	*
	Toshiba	39T2709	R	*
	SATA hard disk drive, 60 GB, 9.5 mm, 5,400 rpm • 6363-CTO, 34x, 35x, 48x, 4Gx, 54x, AAx, E3x, F3x, M3x • 6364-CTO, 54x • 6365-CTO, 4Fx, F3x • 6366-CTO, 4Fx • 6367-CTO • 6368-CTO			
	Fujitsu	39T2639	R	*
	HGST OP	39T2703	R	*
	Toshiba	39T2711	R	*
	SATA hard disk drive, 80 GB, 9.5 mm, 5,400 rpm • 6363-CTO, 46x, 47x, 57x, 58x, 64x, 65x, 66x, 6Dx, 85x, 8Ax, 8Cx, 8Dx, A7x, ACx, ADx, C3x, AMx, F4x, H3x, H4x, K3x, K4x, M4x, M5x, ZZx • 6364-CTO, 46x, 64x, 85x, 6Dx, 8Dx, A7x, ADx • 6365-CTO, 25x, 4Ax, 4Bx, 8Lx, ALx, F5x, K4x, M6x • 6366-CTO, 4Dx, 6Ax, 6Fx, 8Lx, ALx, F6x, H5x, K7x • 6367-CTO • 6368-CTO			
	Fujitsu	39T2641	R	*
	HGST	39T2705	R	*
	Toshiba	39T2713	R	*
	SATA hard disk drive, 100 GB, 9.5 mm, 5,400 rpm • 6363-CTO, 74x, 75x, 78x, 88x, 89x, A9x • 6364-CTO • 6365-CTO, AGx • 6366-CTO, 8Kx, AJx • 6367-CTO • 6368-CTO			
	Fujitsu	39T2643	R	*
	HGST OP	39T2707	R	*
	Toshiba	39T2715	R	*

(continued)

Downloaded from www.Manualslib.com manuals search engine

No.	FRU	FRU no.	RoHS ID	CRU ID
14	SATA hard disk drive, 120 GB, 9.5 mm, 5,400 rpm • 6363-CTO, 8Bx, 94x, 95x, 99x, A8x, ABx, F9x, K5x, M6x • 6364-CTO • 6365-CTO, 8Gx, K6x • 6366-CTO, 98x, 9Ax, L3x, M7x • 6367-CTO • 6368-CTO, A3x			
	Fujitsu	39T2785	R	*
	Toshiba	39T2791	R	*
	SATA hard disk drive, 60 GB, 9.5 mm, 7,200 rpm • 6363-CTO • 6364-CTO • 6365-CTO • 6366-CTO • 6367-CTO • 6368-CTO			
	HGST OP	39T2645	R	*
	Seagate	39T2795	R	*
	SATA hard disk drive, 100 GB, 9.5 mm, 7,200 rpm • 6363-CTO, 86x, 87x, 8Mx, ANx, B3x, F8x, Q3x • 6364-CTO • 6365-CTO • 6366-CTO, APx, B4x • 6367-CTO • 6368-CTO			
	HGST OP	39T2649	R	*
	Seagate	39T2799	R	*
15	Hard disk drive cover assembly (15.4-in.)	42W2544	R	*
16	ThinkPad X6 Tablet UltraBase • 6363-CTO, 65x, 74x, 75x, 78x, 8Ax, 94x, 95x, 99x, A8x, H3x, K3x, ZZx • 6364-CTO • 6365-CTO, 37x, 6Ax, 8Gx, K6x • 6366-CTO, 98x, 9Ax, AJx, H5x, L3x, M7x • 6367-CTO • 6368-CTO, A3x	41W6721	R	*

(continued)

Downloaded from www.Manualslib.com manuals search engine

No.	FRU	FRU no.	RoHS ID	CRU ID
17	DVD drive, 9.5 mm • 6363-CTO • 6364-CTO • 6365-CTO • 6366-CTO • 6367-CTO • 6368-CTO, A3x			
	HLDS (GDR-8085N)	39T2683	R	*
	PCC (UJDA765)	39T2681	R	*
	DVD/CD-RW combo drive, 9.5 mm • 6363-CTO, 65x, 8Ax, H3x, K3x • 6364-CTO • 6365-CTO, 37x, 6Ax • 6366-CTO • 6367-CTO • 6368-CTO			
	HLDS (GCC-4246N)	39T2687	R	*
	PCC (UJDA765DL)	39T2685	R	*
	DVD-RAM/RW drive, 9.5 mm • 6363-CTO, 74x, 75x, 78x, 94x, 95x, 99x, A8x, ZZx • 6364-CTO • 6365-CTO, 8Gx, K6x • 6366-CTO, 98x, 9Ax, AJx, H5x, L3x, M7x • 6367-CTO • 6368-CTO			
	HLDS (GSA-4083N)	39T2679	R	*
	PCC (UJ-842B)	39T2677	R	*
18	DIMM slot cover	42W2543	R	*
19	Digitizer pen	39T7482	R	*
20	Base cover assembly for 6363	42W2547	R	N
	Base cover assembly for 6364	42W2548	R	N
	Base cover assembly for 6365	42W2549	R	N
	Base cover assembly for 6366	42W2550	R	N
	Base cover assembly for 6367	42W2551	R	N
	Base cover assembly for 6368	42W2552	R	N
21	Speaker kit	42W2542	R	N
22	Fan assembly	41V9748	R	N
23	Backup battery	92P1210	R	**

(continued)

Downloaded from www.Manualslib.com manuals search engine

No.	FRU	FRU no.	RoHS ID	CRU ID
24	System board with Intel Core Solo processor T1400 (1.2 GHz) • 6363-CTO • 6364-CTO • 6365-CTO, 23x, 25x • 6366-CTO, 26x • 6367-CTO • 6368-CTO	42W7661	R	N
	System board with Intel Core Duo processor T2400 (1.66 GHz) • 6363-CTO, 34x, 35x, 45x, 46x, 47x, 48x, 4Gx, E3x, F3x, F4x, F8x, F9x • 6364-CTO, 46x • 6365-CTO, 37x, 4Ax, 4Bx, 4Fx, F3x, F5x • 6366-CTO, 4Cx, 4Dx, 4Fx, F6x • 6367-CTO, 44x • 6368-CTO	42W7662	R	N
	System board with Intel Core Duo processor T2500 (2.16 GHz) • 6363-CTO, 54x, 57x, 58x, 64x, 65x, 66x, 6Dx, 84x, 85x, 86x, 87x, 88x, 89x, 8Ax, 8Bx, 8Cx, 8Dx, 8Mx, A6x, A7x, A8x, A9x, AAx, ABx, ACx, AMx, ANx, ADx, H3x, H4x, K3x, K4x, K5x, M3x, M4x, M5x, M6x, ZZx • 6364-CTO, 54x, 64x, 6Dx, 85x, 8Dx, A7x, ADx • 6365-CTO, 8Gx, 8Lx, AGx, ALx, K4x, K6x, M5x • 6366-CTO, 69x, 6Ax, 6Fx, 8Jx, 8Kx, 8Lx, AHx, AJx, ALx, APx, H5x, K7x, M7x • 6367-CTO • 6368-CTO, A3x	42W7663	R	N
	System board with Intel Core Duo processor T2500 (2.16 GHz) with wireless WAN • 6363-CTO, 74x, 75x, 78x, 94x, 95x, 99x, B3x, C3x • 6364-CTO • 6365-CTO • 6366-CTO, 76x, 77x, 96x, 97x, 98x, 9Ax, B4x, C4x, C5x, L3x • 6367-CTO • 6368-CTO	42W7664	R	N
25	PC Card slot	41W1093	R	N
26	Pen switch assembly	42W2556	R	N

(continued)

Downloaded from www.Manualslib.com manuals search engine

No.	FRU	FRU no.	RoHS ID	CRU ID
27	Keyboard bezel assembly, with aluminum • 6363-CTO, 34x, 35x, 45x, 46x, 47x, 48x, 4Gx, 54x, 57x, 58x, 64x, 65x, 66x, 6Dx, E3x, F3x, F4x, F8x, F9x, H3x, H4x • 6364-CTO, 46x, 54x, 64x, 6Dx • 6365-CTO, 23x, 25x, 37x, 4Ax, 4Bx, 4Fx, F3x, F5x • 6366-CTO, 26x, 4Cx, 4Dx, 4Fx, 69x, 6Ax, 6Fx, F6x, H5x • 6367-CTO, 44x • 6368-CTO, A3x			
	with IBM logo for X60 Tablet	42W2539	R	N
	with ThinkPad logo for X60 Tablet	42W3159	R	N
	Keyboard bezel assembly, with copper • 6363-CTO, 74x, 75x, 78x, 84x, 85x, 86x, 87x, 88x, 89x, 8Ax, 8Bx, 8Cx, 8Dx, 8Mx, 94x, 95x, 99x, A6x, A7x, A8x, A9x, AAx, ABx, ACx, ADx, AMx, ANx, B3x, C3x, K3x, K4x, K5x, M3x, M4x, M5x, M6x, Q3x, ZZ1 • 6364-CTO, 85x, 8Dx, A7x, ADx • 6365-CTO, 8Gx, 8Lx, AGx, ALx, K4x, K6x, M5x • 6366-CTO, 76x, 77x, 8Jx, 8Kx, 8Lx, 96x, 97x, 98x, 9Ax, AHx, AJx, ALx, APx, B4x, C4x, C5x, K7x, L3x, M7x • 6367-CTO • 6368-CTO			
	with IBM logo for X60 Tablet	42W2691	R	N
	with ThinkPad logo for X60 Tablet	42W3181	R	N
28	Keyboard (see “Keyboard” on page 117.)			
29	TrackPoint stick caps	91P9642	R	*
—	AC adapter (see “AC adapters” on page 121.)			

Downloaded from www.Manualslib.com manuals search engine

LCD FRUs

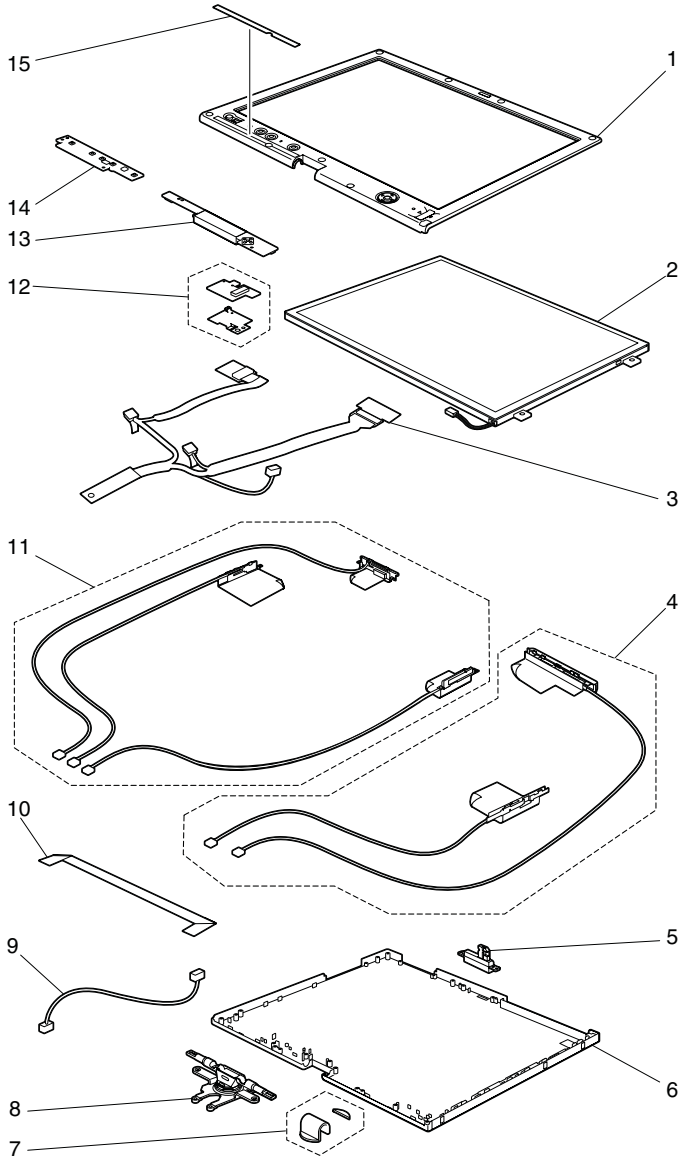

Downloaded from www.Manualslib.com manuals search engine

12.1-in. XGA TFT with digitizer

No.	FRU	FRU no.	RoHS ID	CRU ID
1	LCD front bezel without fingerprint reader • 6363-CTO, 34x, 35x, 54x, 57x, 58x, E3x • 6364-CTO, 54x • 6365-CTO, 23x, 25x, 37x • 6366-CTO, 26x • 6367-CTO • 6368-CTO	42W2536	R	N
	LCD front bezel with fingerprint reader • 6363-CTO, 45x, 46x, 47x, 48x, 4Gx, 64x, 65x, 66x, 6Dx, 74x, 75x, 78x, F3x, F4x, F8x, F9x, H3x, H4x, Q3x • 6364-CTO, 46x, 64x, 6Dx • 6365-CTO, 4Ax, 4Bx, 4Fx, F3x, F5x • 6366-CTO, 4Cx, 4Dx, 4Fx, 69x, 6Ax, 6Fx, 76x, 77x, F6x, H5x • 6367-CTO, 44x • 6368-CTO, A3x	42W2537	R	N
2	12.1-in. XGA TFT, protection plate, digitizer assembly • 6363-CTO, 34x, 35x, 45x, 46x, 47x, 48x, 4Gx, 54x, 57x, 58x, 64x, 65x, 66x, 6Dx, 74x, 75x, 78x, E3x, F3x, F4x, F8x, F9x, H3x, H4x, Q3x • 6364-CTO, 46x, 54x, 64x, 6Dx • 6365-CTO, 23x, 25x, 37x, 4Ax, 4Bx, 4Fx, F3x, F5x • 6366-CTO, 26x, 4Cx, 4Dx, 4Fx, 69x, 6Ax, 6Fx, 76x, 77x, F6x, H5x • 6367-CTO, 44x • 6368-CTO, A3x	13N7215	R	N
3	LCD cable assembly without fingerprint • 6363-CTO, 34x, 35x, 54x, 57x, 58x, E3x • 6364-CTO, 54x • 6365-CTO, 23x, 25x, 37x • 6366-CTO, 26x • 6367-CTO • 6368-CTO	93P4362	R	N
	LCD cable assembly with fingerprint • 6363-CTO, 45x, 46x, 47x, 48x, 4Gx, 64x, 65x, 66x, 6Dx, 74x, 75x, 78x, F3x, F4x, F8x, F9x, H3x, H4x, Q3x • 6364-CTO, 46x, 64x, 6Dx • 6365-CTO, 4Ax, 4Bx, 4Fx, F3x, F5x • 6366-CTO, 4Cx, 4Dx, 4Fx, 69x, 6Ax, 6Fx, 76x, 77x, F6x, H5x • 6367-CTO, 44x • 6368-CTO, A3x	93P4361	R	N

(continued)

Downloaded from www.Manualslib.com manuals search engine

No.	FRU	FRU no.	RoHS ID	CRU ID
4	Wireless WAN antenna cable set (Verizon/Cingular, AUX) • 6363-CTO, 74x, 75x, 78x • 6364-CTO • 6365-CTO • 6366-CTO, 76x, 77x • 6367-CTO • 6368-CTO	93P4364	R	N
	Wireless WAN antenna cable set (Vodafone, AUX) • 6363-CTO, Q3x • 6364-CTO • 6365-CTO • 6366-CTO • 6367-CTO • 6368-CTO	93P4365	R	N
5	Center latch assembly	42W2538	R	N
6	LCD rear cover assembly with IBM logo for X60 Tablet	42W2535	R	N
	LCD rear cover assembly with ThinkPad logo for X60 Tablet	42W3158	R	N
7	LCD hinge caps	42W2546	R	N
8	LCD hinge assembly	42W2545	R	N
9	Microphone cable assembly	93P4368	R	N
10	Micro processor board/inverter card flexible flat cable	93P4370	R	N
11	Wireless LAN antenna cable set (MAIN, AUX, and 3rd)	93P4363	R	N
12	Fingerprint card • 6363-CTO, 45x, 46x, 47x, 48x, 4Gx, 64x, 65x, 66x, 6Dx, 74x, 75x, 78x, F3x, F4x, F8x, F9x, H3x, H4x, Q3x • 6364-CTO, 46x, 64x, 6Dx • 6365-CTO, 4Ax, 4Bx, 4Fx, F3x, F5x • 6366-CTO, 4Cx, 4Dx, 4Fx, 69x, 6Ax, 6Fx, 76x, 77x, F6x, H5x • 6367-CTO, 44x • 6368-CTO, A3x	41W1476	R	N
13	Inverter card			
	Foxconn	41W1468	R	N
	YEC	41W1469	R	N
14	Micro processor board	41W1471	R	N
15	LCD icon plate	42W2554	R	N

Downloaded from www.Manualslib.com manuals search engine

12.1-in. SXGA+ TFT with digitizer

No.	FRU	FRU no.	RoHS ID	CRU ID
1	LCD front bezel without fingerprint reader • 6363-CTO • 6364-CTO • 6365-CTO • 6366-CTO • 6367-CTO • 6368-CTO	42W2536	R	N
	LCD front bezel with fingerprint reader • 6363-CTO, A6x, A7x, A8x, A9x, AAx, ABx, ACx, ADx, AMx, ANx, B3x, C3x, M3x, M4x, M5x, M6x • 6364-CTO, A7x, ADx • 6365-CTO, AGx, ALx, M5x • 6366-CTO, AHx, AJx, ALx, APx, B4x, C4x, C5x, M7x • 6367-CTO • 6368-CTO	42W2537	R	N
2	12.1-in. SXGA+ TFT, protection plate, digitizer assembly • 6363-CTO, A6x, A7x, A8x, A9x, AAx, ABx, ACx, ADx, AMx, ANx, B3x, C3x, M3x, M4x, M5x, M6x • 6364-CTO, A7x, ADx • 6365-CTO, AGx, ALx, M5x • 6366-CTO, AHx, AJx, ALx, APx, B4x, C4x, C5x, M7x • 6367-CTO • 6368-CTO	13N7204	R	N
3	LCD cable assembly without fingerprint • 6363-CTO • 6364-CTO • 6365-CTO • 6366-CTO • 6367-CTO • 6368-CTO	93P4362	R	N
	LCD cable assembly with fingerprint • 6363-CTO, A6x, A7x, A8x, A9x, AAx, ABx, ACx, ADx, AMx, ANx, B3x, C3x, M3x, M4x, M5x, M6x • 6364-CTO, A7x, ADx • 6365-CTO, AGx, ALx, M5x • 6366-CTO, AHx, AJx, ALx, APx, B4x, C4x, C5x, M7x • 6367-CTO • 6368-CTO	93P4361	R	N

(continued)

Downloaded from www.Manualslib.com manuals search engine

No.	FRU	FRU no.	RoHS ID	CRU ID
4	Wireless WAN antenna cable set (Verizon/Cingular, AUX) • 6363-CTO, B3x, C3x • 6364-CTO • 6365-CTO • 6366-CTO, B4x, C4x, C5x • 6367-CTO • 6368-CTO	93P4364	R	N
	Wireless WAN antenna cable set (Vodafone, AUX) • 6363-CTO • 6364-CTO • 6365-CTO • 6366-CTO • 6367-CTO • 6368-CTO	93P4365	R	N
5	Center latch assembly	42W2538	R	N
6	LCD rear cover assembly with IBM logo for X60 Tablet	42W2535	R	N
	LCD rear cover assembly with ThinkPad logo for X60 Tablet	42W3158	R	N
7	LCD hinge caps	42W2546	R	N
8	LCD hinge assembly	42W2545	R	N
9	Microphone cable assembly	93P4368	R	N
10	Micro processor board/inverter card flexible flat cable	93P4370	R	N
11	Wireless LAN antenna cable set (MAIN, AUX, and 3rd)	93P4363	R	N
12	Fingerprint card • 6363-CTO, A6x, A7x, A8x, A9x, AAx, ABx, ACx, ADx, AMx, ANx, B3x, C3x, M3x, M4x, M5x, M6x • 6364-CTO, A7x, ADx • 6365-CTO, AGx, ALx, M5x • 6366-CTO, AHx, AJx, ALx, APx, B4x, C4x, C5x, M7x • 6367-CTO • 6368-CTO	41W1476	R	N
13	Inverter card			
	Foxconn	41W1468	R	N
	YEC	41W1469	R	N
14	Micro processor board	41W1471	R	N
15	LCD icon plate	42W2554	R	N

Downloaded from www.Manualslib.com manuals search engine

12.1-in. XGA+ TFT, touch panel with digitizer

No.	FRU	FRU no.	RoHS ID	CRU ID
1	LCD front bezel without fingerprint reader • 6363-CTO • 6364-CTO • 6365-CTO • 6366-CTO • 6367-CTO • 6368-CTO	42W2655	R	N
	LCD front bezel with fingerprint reader • 6363-CTO, 84x, 85x, 86x, 87x, 88x, 89x, 8Ax, 8Bx, 8Cx, 8Dx, 8Mx, 94x, 95x, 99x, K3x, K4x, K5x, ZZx • 6364-CTO, 85x, 8Dx • 6365-CTO, 8Gx, 8Lx, K4x, K6x • 6366-CTO, 8Jx, 8Kx, 8Lx, 96x, 97x, 98x, 9Ax, K7x, L3x • 6367-CTO • 6368-CTO	42W2656	R	N
2	12.1-in. XGA TFT, touch panel, digitizer assembly • 6363-CTO, 84x, 85x, 86x, 87x, 88x, 89x, 8Ax, 8Bx, 8Cx, 8Dx, 8Mx, 94x, 95x, 99x, K3x, K4x, K5x, ZZx • 6364-CTO, 85x, 8Dx • 6365-CTO, 8Gx, 8Lx, K4x, K6x • 6366-CTO, 8Jx, 8Kx, 8Lx, 96x, 97x, 98x, 9Ax, K7x, L3x • 6367-CTO • 6368-CTO	13N7216	R	N
3	LCD cable assembly without fingerprint • 6363-CTO • 6364-CTO • 6365-CTO • 6366-CTO • 6367-CTO • 6368-CTO	93P4362	R	N
	LCD cable assembly with fingerprint • 6363-CTO, 84x, 85x, 86x, 87x, 88x, 89x, 8Ax, 8Bx, 8Cx, 8Dx, 8Mx, 94x, 95x, 99x, K3x, K4x, K5x, ZZx • 6364-CTO, 85x, 8Dx • 6365-CTO, 8Gx, 8Lx, K4x, K6x • 6366-CTO, 8Jx, 8Kx, 8Lx, 96x, 97x, 98x, 9Ax, K7x, L3x • 6367-CTO • 6368-CTO	93P4361	R	N

(continued)

Downloaded from www.Manualslib.com manuals search engine

No.	FRU	FRU no.	RoHS ID	CRU ID
4	Wireless WAN antenna cable set (Verizon/Cingular, AUX) • 6363-CTO, 94x, 95x, 99x • 6364-CTO • 6365-CTO • 6366-CTO, 96x, 97x, 98x, 9Ax, L3x • 6367-CTO • 6368-CTO	93P4364	R	N
	Wireless WAN antenna cable set (Vodafone, AUX) • 6363-CTO • 6364-CTO • 6365-CTO • 6366-CTO • 6367-CTO • 6368-CTO	93P4365	R	N
5	Center latch assembly	42W2538	R	N
6	LCD rear cover assembly with IBM logo for X60 Tablet	42W2535	R	N
	LCD rear cover assembly with ThinkPad logo for X60 Tablet	42W3158	R	N
7	LCD hinge caps	42W2546	R	N
8	LCD hinge assembly	42W2545	R	N
9	Microphone cable assembly	93P4368	R	N
10	Micro processor board/inverter card flexible flat cable	93P4370	R	N
11	Wireless LAN antenna cable set (MAIN, AUX, and 3rd)	93P4363	R	N
12	Fingerprint card • 6363-CTO, 84x, 85x, 86x, 87x, 88x, 89x, 8Ax, 8Bx, 8Cx, 8Dx, 8Mx, 94x, 95x, 99x, K3x, K4x, K5x, ZZx • 6364-CTO, 85x, 8Dx • 6365-CTO, 8Gx, 8Lx, K4x, K6x • 6366-CTO, 8Jx, 8Kx, 8Lx, 96x, 97x, 98x, 9Ax, K7x, L3x • 6367-CTO • 6368-CTO	41W1476	R	N
13	Inverter card			
	Foxconn	41W1468	R	N
	YEC	41W1469	R	N
14	Micro processor board	41W1471	R	N
15	LCD icon plate	42W2554	R	N

Downloaded from www.Manualslib.com manuals search engine

Keyboard

Language	P/N (NMB)	RoHS ID	CRU ID
Arabic	39T7280	R	**
Belgian	39T7277		
Chinese, Traditional	39T7291		
Czech	39T7285		
Danish	39T7274		
Dutch	39T7271		
English, U.K.	39T7269		
English, U.S.	39T7265		
English, U.S. (International, with a Euro symbol)	39T7295		
Finnish, Swedish	39T7272		
French, Canadian (058)	39T7267		
French, Canadian (Acnor)	39T7266		
French, European	39T7270		
German	39T7268		
Greek	39T7287		
Hebrew	39T7282		
Hungarian	39T7286		
Italian	39T7275		
Japanese	39T7290		
Korean	39T7292		
Norwegian	39T7273		
Polish	39T7283		
Portuguese	39T7279		
Portuguese, Brazilian	39T7320		
Russian	39T7281		
Slovak	39T7289		
Slovenian	39T7288		
Spanish, European	39T7276		
Spanish, Latin American	39T7293		
Swiss	39T7278		
Thai	39T7294		
Turkish	39T7284		

Downloaded from www.Manualslib.com manuals search engine

Recovery discs

Windows XP Tablet Edition CDs

Windows XP Tablet Edition is preinstalled as the operating system in the following models:

- 6363-CTO, 34x,35x, 46x, 47x, 48x, 4Gx, 54x, 57x, 58x, 64x, 65x, 66x, 6Dx, 74x, 75x, 78x, 85x, 86x, 87x, 88x, 89x, 8Ax, 8Bx, 8Cx, 8Dx, 8Mx,94x, 95x, 99x, A7x, C3x, A8x, A9x, AAx, ABx, ACx, ADx, AMx, ANx, B3x, ZZx
- 6364-CTO, 46x, 54x, 64x, 85x, 6Dx, 8Dx, A7x, ADx
- 6365-CTO, 23x, 25x, 37x, 4Ax, 4Bx, 4Fx, 8Gx, 8Lx, AGx, ALx
- 6366-CTO, 4Dx, 4Fx, 6Ax, 6Fx, 8Kx, 8Lx, 98x, 9Ax, AJx, ALx, APx, B4x
- 6367-CTO, 44x
- 6368-CTO, 68x

Language	P/N	RoHS ID	CRU ID
Chinese, Simplified	43T5547	R	*
Chinese, Traditional	43T5548		
Chinese, Traditional (Hong Kong S.A.R.)	43T5549		
Czech	43T5541		
Danish	43T5539		
Dutch	43T5540		
English, Russia	43T5551		
English, U.K.	43T5533		
English, U.S.	43T5529		
Finnish	43T5542		
French	43T5530		
German	43T5531		
Hungarian	43T5546		
Italian	43T5535		
Japanese	43T5536		
Korean	43T5550		
Norwegian	43T5537		
Polish	43T5543		
Portuguese, Brazilian	43T5534		
Russian	43T5544		
Spanish	43T5532		
Swedish	43T5538		
Turkish	43T5545		

Downloaded from www.Manualslib.com manuals search engine

Windows Vista Business (32 bit) DVDs

Windows Vista Business (32 bit) is preinstalled as the operating system in the following models:

- 6363-CTO, E3x, F4x, F8x, F9x, H3x, H4x, K3x, K5x, M3x, M4x, M6x, Q3x
- 6364-CTO
- 6365-CTO, F3x, F5x, K4x, K6x, M5x
- 6366-CTO, F6x, H5x, K7x, L3x, M7x
- 6367-CTO
- 6368-CTO

Language	P/N	RoHS ID	CRU ID
Chinese, Simplified	43T7739	R	*
Chinese, Traditional	43T7740		
Chinese, Traditional (Hong Kong S.A.R.)	43T7741		
Czech	43T7731		
Danish	43T7728		
Dutch	43T7729		
English, Russia	43T7720		
English, U.K.	43T7719		
English, U.S.	43T7718		
Finnish	43T7730		
French	43T7721		
German	43T7722		
Greek	43T7736		
Hungarian	43T7735		
Italian	43T7725		
Japanese	43T7738		
Korean	43T7742		
Norwegian	43T7726		
Polish	43T7731		
Portuguese, Brazilian	43T7724		
Russian	43T7733		
Slovenian	43T7737		
Spanish	43T7723		
Swedish	43T7727		
Turkish	43T7734		

Downloaded from www.Manualslib.com manuals search engine

Miscellaneous parts

FRU	P/N	RoHS ID	CRU ID
Screw kit (including nylon-coated screws):	42W2553	R	N
Base cover miscellaneous parts: • Slide lever, eject • Slide lever spring • Bracket puller, eject • Spring, eject • Flap, card bus • Spring, flap • Rubber foot (front - front with projection) • Rubber foot (rear, L) • Insulation sheet 1 • Insulation sheet 2 • Latch, battery eject • Spring, battery eject • Screw cap (dia. 7 mm)	42W2540	R	N
System miscellaneous parts: • *(a)* Connector bracket • *(b)* Shield bracket **Note:** Italicized letters in parentheses are references to the exploded view on page 100.	42W2541	R	N

Downloaded from www.Manualslib.com manuals search engine

AC adapters

FRU	P/N	RoHS ID	CRU ID
2-pin (65 W, 20 V) adapter (models CTO, xxE, xxF, xxJ, xxL, xxP, xxS, xxY, xxU)			
ASTEC	92P1214	R	*
Delta	92P1155	R	*
Lite-On	92P1159	R	*
3-pin (65W, 20 V) adapter (models CTO, xxA, xxB, xxC, xxG, xxH, xxK, xxM, xxT, xxV) OP			
ASTEC	92P1212	R	*
Delta	92P1153	R	*
Lite-On	92P1157	R	*

Optional FRUs

FRU	P/N	RoHS ID	CRU ID
Serial/Parallel port bay adapter	40Y8124	R	*
Ultrabay Slim battery (2nd bay battery)	40Y6790	R	*
SATA hard disk drive adapter, 9.5 mm	26R9246	R	*
Ultrabay Slim Li Polymer battery (2nd bay battery), Sanyo (WW)	08K8191	N	*
Multiple battery charger	02K6642	N	*
Diskette drive cable	27L0525	N	*
Diskette drive (TEAC)	08K9606	N	*
Diskette drive (Sony)	08K9607	N	*

Downloaded from www.Manualslib.com manuals search engine

Common parts list

Tools

Tool	P/N
Triconnector wrap plug	72X8546
Audio wrap cable	66G5180
USB parallel test cable	05K2580
Screwdriver kit	95F3598
Mini PC tool set	00P7033
1/4" drive spinner handle	1650840
1/4" Sq. to 1/4" hex torx adapter	93F2838
TR7-TR-10 tamper resistant torx bits	00P6967
Removal tool antenna RF connector	08K7159
PCI-Express/USB wrap card	27K9813
USB 2.0 CD-RW/DVD-ROM combo drive II	40Y8687
USB cable	40Y8704
USB floppy diskette drive for maintenance diskette	05K9283
USB floppy diskette drive tool kit	27L3452
ThinkPad Hardware Maintenance Diskette Version 1.73 or later **Note:** Download the file from the following Web site: `http://www.lenovo.com/spm`	—

Downloaded from www.Manualslib.com manuals search engine

Power cords

A ThinkPad power cord for a specific country or region is usually available only in that country or region:

For 2-pin power cords:

Region	P/N (Longwell)	P/N (Volex)	RoHS ID	CRU ID
Argentina	42T5020	42T5105	R	*
Brazil	42T5180	42T5183		
Canada, U.S.	42T5008	42T5093		
Japan	42T5014	42T5099		

For 3-pin power cords:

Region	P/N (Longwell)	P/N (Volex)	RoHS ID	CRU ID
Australia, New Zealand	42T5050	42T5135	R	*
Bangladesh, South Africa, Sri Lanka	42T5056	42T5141		
China	42T5065	42T5150		
Denmark	42T5041	42T5126		
Europe	42T5029	42T5114		
Hong Kong S.A.R. of China, U.K.	42T5035	42T5120		
India	42T5083	42T5168		
Israel	42T5062	42T5147		
Italy	42T5047	42T5132		
Korea	42T5077	42T5162		
Philippine, Saudi Arabia, Thailand	42T5004	42T5089		
Switzerland	42T5044	42T5129		
Taiwan	42T5071	42T5156		

Downloaded from www.Manualslib.com manuals search engine

Notices

Lenovo may not offer the products, services, or features discussed in this document in all countries. Consult your local Lenovo representative for information on the products and services currently available in your area. Any reference to a Lenovo product, program, or service is not intended to state or imply that only that Lenovo product, program, or service may be used. Any functionally equivalent product, program, or service that does not infringe any Lenovo intellectual property right may be used instead. However, it is the user's responsibility to evaluate and verify the operation of any other product, program, or service.

Lenovo may have patents or pending patent applications covering subject matter described in this document. The furnishing of this document does not give you any license to these patents. You can send license inquiries, in writing, to:

Lenovo (United States), Inc.
500 Park Offices Drive, Hwy. 54
Research Triangle Park, NC 27709
U.S.A.
Attention: Lenovo Director of Licensing

LENOVO GROUP LTD. PROVIDES THIS PUBLICATION "AS IS" WITHOUT WARRANTY OF ANY KIND, EITHER EXPRESS OR IMPLIED, INCLUDING, BUT NOT LIMITED TO, THE IMPLIED WARRANTIES OF NON-INFRINGEMENT, MERCHANTABILITY OR FITNESS FOR A PARTICULAR PURPOSE. Some jurisdictions do not allow disclaimer of express or implied warranties in certain transactions, therefore, this statement may not apply to you.

This information could include technical inaccuracies or typographical errors. Changes are periodically made to the information herein; these changes will be incorporated in new editions of the publication. Lenovo may make improvements and/or changes in the product(s) and/or the program(s) described in this publication at any time without notice.

The products described in this document are not intended for use in implantation or other life support applications where malfunction may result in injury or death to persons. The information contained in this document does not affect or change Lenovo product specifications or warranties. Nothing in this document shall operate as an express or implied license or indemnity under the intellectual property rights of Lenovo or third parties. All information contained in this document was obtained in specific environments and is presented as an illustration. The result obtained in other operating environments may vary.

Lenovo may use or distribute any of the information you supply in any way it believes appropriate without incurring any obligation to you.

Any references in this publication to non-Lenovo Web sites are provided for convenience only and do not in any manner serve as an endorsement of those Web sites. The materials at those Web sites are not part of the materials for this Lenovo product, and use of those Web sites is at your own risk.

Any performance data contained herein was determined in a controlled environment. Therefore, the result obtained in other operating environments may vary significantly. Some measurements may have been made on development-level systems and there is no guarantee that these measurements will be the same on generally available systems. Furthermore, some measurements may have been

Downloaded from www.Manualslib.com manuals search engine

estimated through extrapolation. Actual results may vary. Users of this document should verify the applicable data for their specific environment.

Trademarks

The following terms are trademarks of Lenovo in the United States, other countries, or both:

Lenovo
Active Protection System
Rescue and Recovery
ThinkPad®
ThinkVantage®
TrackPoint®
UltraBase
Ultrabay

The following terms are trademarks of the International Business Machines Corporation in the United States, other countries, or both:

IBM (used under license)

The following terms are trademarks of Microsoft Corporation in the United States, other countries, or both:

Windows®
Windows Vista

The following are trademarks of Intel Corporation or its subsidiaries in the United States, other countries, or both:

Intel®
Intel® Core™
Intel® Core™ Duo
Intel® Core™ Solo

Other company, product, or service names may be the trademarks or service marks of others.

Downloaded from www.Manualslib.com manuals search engine

ThinkPad®

Part Number: 42T7849

(1P) P/N: 42T7849

Downloaded from www.Manualslib.com manuals search engine